LIRON LIGHTING
YOUR RELIABLE LIGHTING SOURCE

HZ3 Series

FIXTURE TYPE:
PROJECT NAME:
LOCATION:
DATE:

HAZARDOUS LOCATION FIXTURE

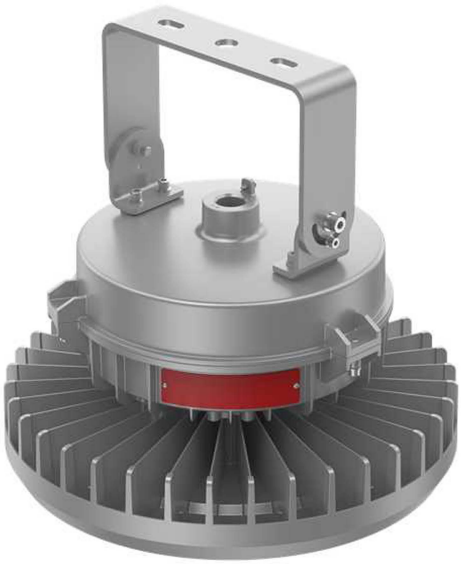

Certification

Class I, Division II, Group A, B, C, D
Class II, Division I, Group E, F, G
Class II, Division II, Group F, G
Class III
UL844
UL1598A Marine
Class I, Zone 2, Group IIC
Zone 20 and Zone 21
Zone 22
Type 4X IP66
Certification No.:CSA23CA80090262X

Dimensions

30W/50W/75W/100W

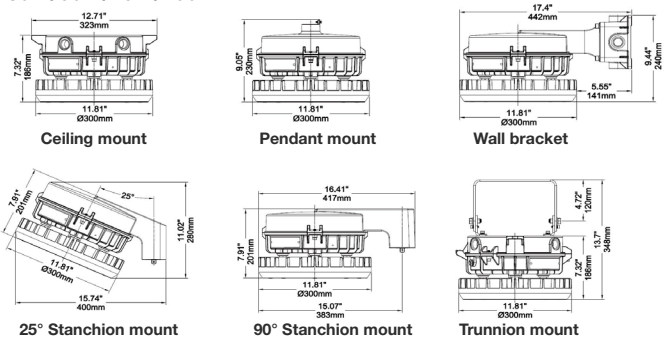

120W/150W/180W/200W/240W

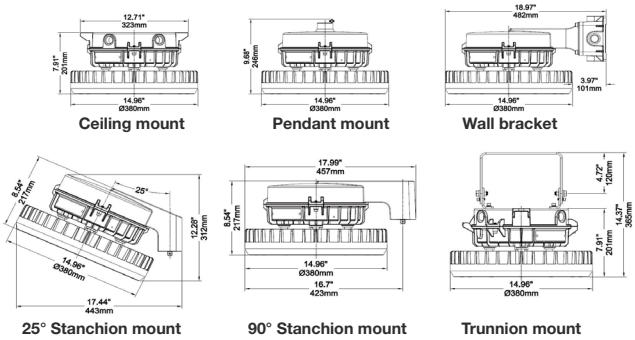

Features

- Available in 30W, 50W, 75W, 100W, 120W; 150W, 180W, 200W, 240W.
- Input Voltage: AC100-277V， AC277-480V (50/60Hz).
- Pendant, ceiling, wall, Trunnion, 25° stanchion and 90° stanchion mounting options.
- 3/4 NPT conduit size.
- The max operating ambient temperature range: -40°C to +65°C.
- Optional stainless steel guard.
- Flip-type structure for easy access to internal components.
- Provides up to 1620 lumens illumination for 90 minutes or 720 lumens illumination for 3 hours of emergency lighting.
- Die-cast aluminum body and frame-corrosion resistant.
- Rugged construction ensures long-life and safe operation.
- 5-year warranty

LIRON LIGHTING
YOUR RELIABLE LIGHTING SOURCE

HZ3 Series

FIXTURE TYPE:
PROJECT NAME:
LOCATION:
DATE:

HAZARDOUS LOCATION FIXTURE

Ordering Guide

Fixture Type	Wattage	Color Temp	Voltage
HZ3	30W 50W 75W 100W	30K = 3000K 35K = 3500K 40K = 4000K 50K = 5000K 57K = 5700K 65K = 6500K R = Red G = Green B = Blue A = Amber	Blank = 100-277VAC HV = 277-480VAC
HZ3L	120W 150W 180W 200W 240W		

Dimming	Lens	Beam angle	Mounting Methods	Optional Accessories
Blank = 1-10V Dimmable	Blank = Clear Glass	Blank = 120°	Blank =Trunnion Mount/ Pendant Mount CM = Ceiling Mount SCM25 = 25° Stanchion Mount WB = Wall Bracket SCM90 = 90° Stanchion mount	WG (SKU:HZ3-WG) = Wire Guard WGL (SKU:HZ3-WGL) = Wire Guard EM9 = 9W Emergency battery backup. Internal pre-install

 • 2025 Liron Lighting All Rights Reserved

LIRON LIGHTING
YOUR RELIABLE LIGHTING SOURCE

HZ3 Series

FIXTURE TYPE:
PROJECT NAME:
LOCATION:
DATE:

HAZARDOUS LOCATION FIXTURE

Performance Data

HZ3	5000K		
WATTAGE	VOLTAGE	LUMEN	EFFICACY
30W	100-277VAC	4200lm	140lm/W
50W	100-277VAC	7000lm	140lm/W
75W	100-277VAC	10500lm	140lm/W
100W	100-277VAC	14000lm	140lm/W

HZ3L	5000K		
WATTAGE	VOLTAGE	LUMEN	EFFICACY
120W	100-277VAC	16800lm	140lm/W
150W	100-277VAC	21000lm	140lm/W
180W	100-277VAC	25200lm	140lm/W
200W	100-277VAC	28000lm	140lm/W
240W	100-277VAC	33600lm	140lm/W

PRODUCT MODEL	RATED POWER	TAMB	T-CODE	
			CL.I Div.2	CL.II & CL.III
HZ3-30W	30W	-40°C to +65°C	T5	T5
HZ3-50W	50W	-40°C to +60°C	T6	T6
HZ3-75W	75W	-40°C to +60°C	T5	T5
HZ3-100W	100W	-40°C to +60°C	T5	T5
HZ3L-120W	120W	-40°C to +65°C	T5	T5
HZ3L-150W	150W	-40°C to +55°C	T5	T5
HZ3L-180W	180W	-40°C to +45°C	T5	T5
HZ3L-200W	200W	-40°C to +45°C	T5	T5
HZ3L-240W	240W	-40°C to +45°C	T5	T5

 • 2025 Liron Lighting All Rights Reserved

LIRON LIGHTING
YOUR RELIABLE LIGHTING SOURCE

HZ3 Series

FIXTURE TYPE:
PROJECT NAME:
LOCATION:
DATE:

HAZARDOUS LOCATION FIXTURE

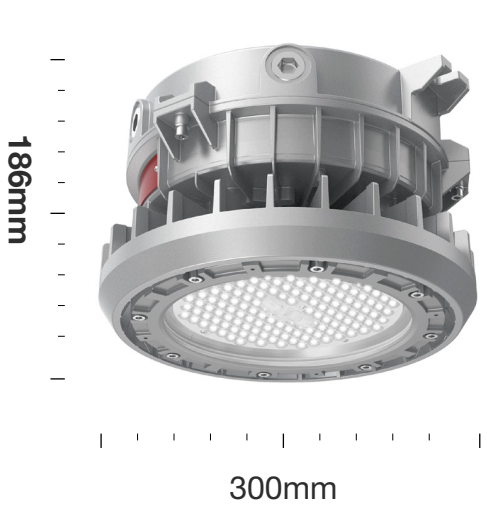



Available in
30-240W

Lumen package
4200-33600lm

Which can replace up to
HPS 700W

Color options

Warm White-Cool White options

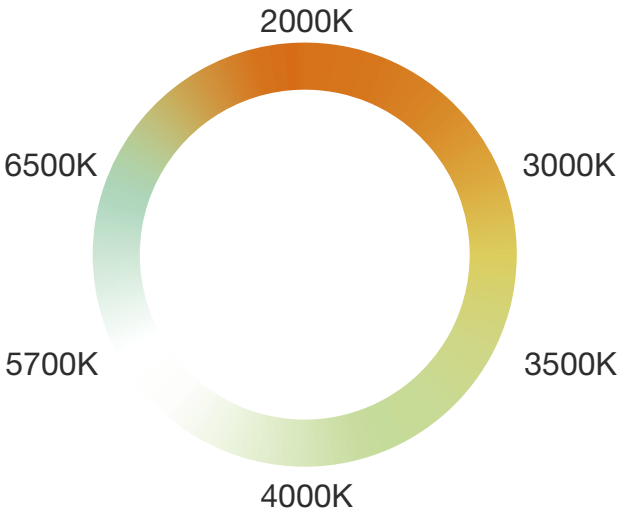

Colored LED R/G/B/AMBER options

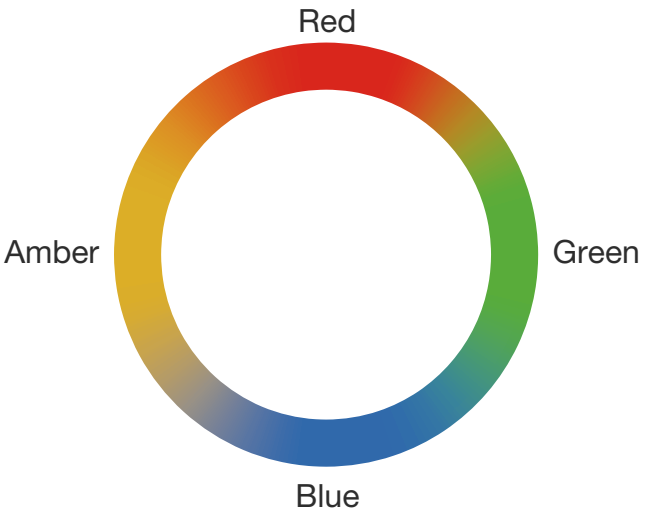

 • 2025 Liron Lighting All Rights Reserved

LIRON LIGHTING
YOUR RELIABLE LIGHTING SOURCE

HZ3 Series

FIXTURE TYPE:
PROJECT NAME:
LOCATION:
DATE:

HAZARDOUS LOCATION FIXTURE

Marine grade

Adopt high-strength copper-free aluminum alloy die-casting shell, surface spraying special outdoor powder, standard parts and brackets are made of stainless steel + special anti-corrosion treatment, suitable for marine environment.

Heat dissipation

Optimal heat management designed with separate volumes for the LED modules and the driver

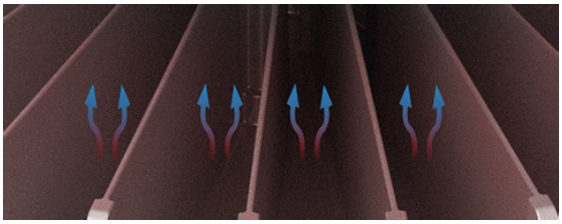



Protective cover option

Heavy gauge stainless steel wire guard provides extra protection

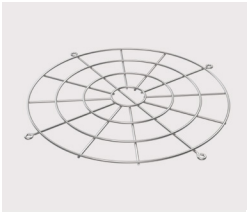

Loop-in & Loop-out

Well-organized terminal block, the ceiling mounting, bracket mounting and wall mounting are equipped with four conduit holes, which can realize lamps interconnection, greatly facilitating on-site installation and wiring

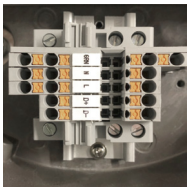



 • 2025 Liron Lighting All Rights Reserved

LIRON LIGHTING
YOUR RELIABLE LIGHTING SOURCE

HZ3 Series

FIXTURE TYPE:
PROJECT NAME:
LOCATION:
DATE:

HAZARDOUS LOCATION FIXTURE

Optional Accessories

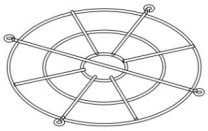

Wire Guard
(SKU:HZ3-WG)
Dimension: 235x235x6mm
Surface Treatment: Nickel Plating

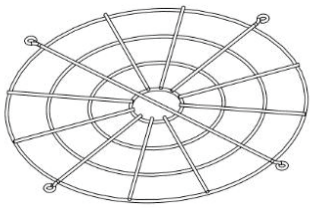

Wire Guard
(SKU:HZ3-WGL)
Dimension: 319x319x6mm
Surface Treatment: Nickel Plating

Mounting Methods

Option 1: Ceiling Mount

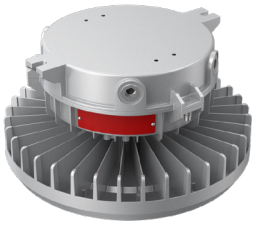

Accessory

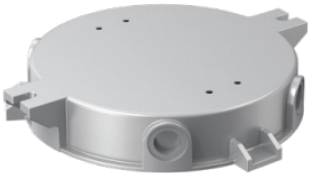

Option 2: 25°Stanchion Mount



Accessory



LIRON LIGHTING
YOUR RELIABLE LIGHTING SOURCE

HZ3 Series

FIXTURE TYPE:
PROJECT NAME:
LOCATION:
DATE:

HAZARDOUS LOCATION FIXTURE

Option 3: Wall Bracket

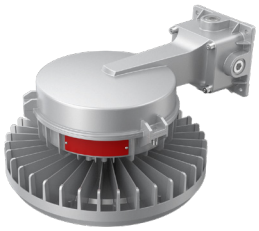

Accessory



Option 4: 90° Stanchion mount



Accessory



Option 5: 3/4" Pendant mount



Note: 3/4" pendant pipe NOT included

 • 2025 Liron Lighting All Rights Reserved