LIRON LIGHTING
YOUR RELIABLE LIGHTING SOURCE

WF 4/6 Series

FIXTURE TYPE:
PROJECT NAME:
LOCATION:
DATE:

5CCT ULTRA SLIM RECESSED DOWNLIGHT



Dimensions

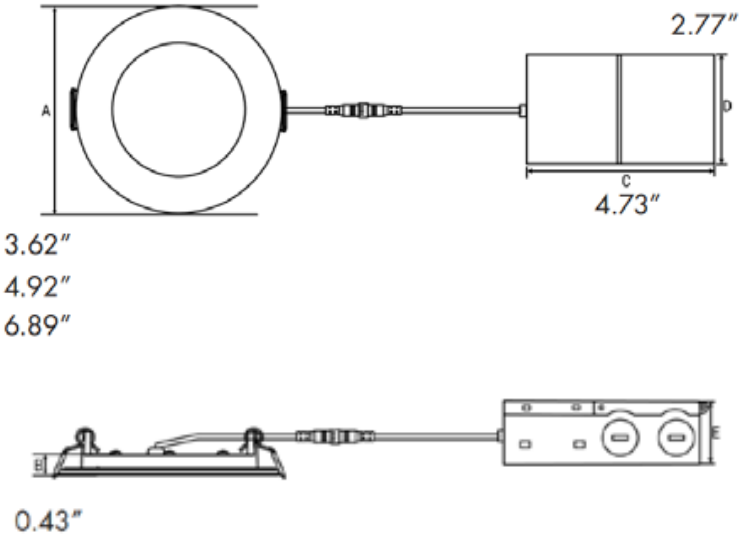

Product Performance Standard

Size	4”/6”
Weight	2lb
Mounting	Recessed Mount
CRI	90
Color Temp	5CCT
Input Voltage	120V
Power Factor	90%
LED Lifespan	50,000 Hrs
Dimmable	Triac dimmable
Efficacy	up to 86 lm/W
Warranty	5 Years
Ambient Operation Temperature	-15°C (-4°F) ~ 40° C(104°F)

 • 2025 Liron Lighting All Rights Reserved

LIRON LIGHTING
YOUR RELIABLE LIGHTING SOURCE

WF 4/6 Series

FIXTURE TYPE:
PROJECT NAME:
LOCATION:
DATE:

5CCT ULTRA SLIM RECESSED DOWNLIGHT

Features

- 0.39“ Ultra thin canless recessed lights designed for the new construction
- Housing and J-box not required; easy install spring clips firmly secure recessed LED lights in ceiling
- Selectable 5CCT from 2700K to 5000K
- Durable die cast aluminum alloy for optimal heat dissipation
- Compatible with many dimmers that dimming from 100% to 10%
- White finish
- Wet location rated

Ordering Guide Example: WF4-5CCT

Fixture Type	Size & Wattage	Color Temp	Voltage	Trim
WF	4 = 4Inch 6 = 6Inch	5CCT = 27/30/35/40/50K (Color Temperature Adjustable)	Blank = 120V	Blank = White

Product Information

	2700K		3000K		3500K		4000K		5000K	
Size & Wattage	LUMEN	EFFICACY	LUMEN	EFFICACY	LUMEN	EFFICACY	LUMEN	EFFICACY	LUMEN	EFFICACY
4Inch 9W	562lm	62lm/W	602lm	66lm/W	613lm	68lm/W	637lm	70lm/W	644lm	71lm/W
6Inch12W	936lm	78lm/W	996lm	86lm/W	996lm	86lm/W	1038lm	86lm/W	1038lm	86lm/W

6 Inch: Easily flip the switch for desired CCT

