LIRON LIGHTING
YOUR RELIABLE LIGHTING SOURCE

UFL2S Series

FIXTURE TYPE:
PROJECT NAME:
LOCATION:
DATE:

LED FLOOD LIGHT WATTAGE SELECTABLE & 3CCT

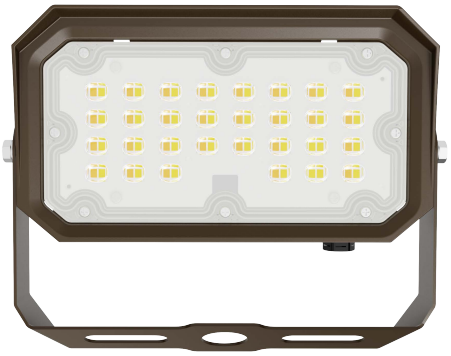

Yoke Mount



Knuckle Mount

Dimensions

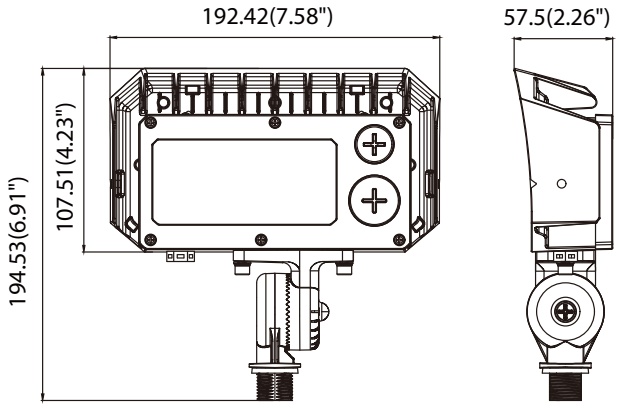

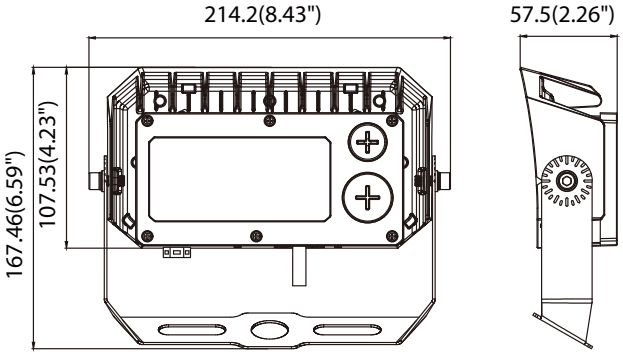

Specification

Material	Seal die casting aluminum housing
Lens	Polycarbonate optical lens
Beam angle	7H*6V
Color Temp	3CCT 3000K/4000K/5000K
CRI	80
Input Voltage	120-277V
Installation	Yoke, Knuckle
Efficacy	Up to 130 lm/W
LED Lifespan	50,000 hrs
Dimmable	0-10V Dimming
Lumen Package	1,875 lm to 3,900 lm
Ambient Operation Temperature	-40°C (-40°F) ~ 45°C(113°F)
Warranty	5 Years
Listing	UL Listed,IP 65,DLC PREMIUM

2025 Liron Lighting All Rights Reserved

LIRON LIGHTING
YOUR RELIABLE LIGHTING SOURCE

UFL2S Series

FIXTURE TYPE:
PROJECT NAME:
LOCATION:
DATE:

LED FLOOD LIGHT WATTAGE SELECTABLE & 3CCT

Features

- Premium durable High-Quality LED Flood Light, engineered to provide unparalleled performance and reliability.
- Built with high-grade aluminum for enhanced durability and protection against external elements.
- Efficient heat dissipation ensures optimal performance and longevity of the LED modules.
- Design to deliver a uniform and wide flood 7H X 6V light distribution.
- Featuring wattage selectable and 3CCT color temperature adjustable, allow you to customize the wattage and CCT on-site to suit your specific lighting needs.
- Versatile mounting options included: Yoke mount, knuckles mount.
- Premium powder coat dark bronze finish provides resistance to corrosion and weathering.
- Features an integrated photocell for automatic dusk-to-dawn operation, providing enhanced energy efficiency and convenience. Includes a switch that allows you to turn the photocell sensor on or off as needed.
- The light engines and housing are IP65 rated, and sealed against moisture or environmental contaminants.

Ordering Guide

Example: UFL2S-UW-3CCT-30W-KN

SKU	Wattage	Color Temp	Voltage	Maximum Wattage
UFL2S	UW = Wattage Selectable	3CCT = 3000K/4000/5000K Color Temp. Adjustable	Blank = 120-277V	30W = Maximum Wattage 30 Watt (UFL2S)

Mounting Options

Mounting
KN = Knuckle Mount YM = Yoke Mount

Performance Data

	3000K		4000K		5000K	
WATTAGE	LUMEN	EFFICACY	LUMEN	EFFICACY	LUMEN	EFFICACY
15W	1875lm	125 lm/W	1950lm	130 lm/W	1950lm	130 lm/W
20W	2500lm	125 lm/W	2600lm	130 lm/W	2600lm	130 lm/W
30W	3750lm	125 lm/W	3900lm	130 lm/W	3900lm	130 lm/W

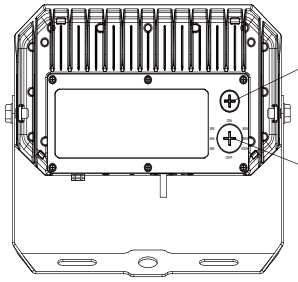

Open the plug with a flat-blade screwdriver and turn the switch to the desired position:
The switch on the left indicates the gear of the color temperature;
The switch in the middle indicates the opening or closing of the photo control sensor;
The switch on the right indicates the gear of the power.

2025 Liron Lighting All Rights Reserved