LIRON LIGHTING
YOUR RELIABLE LIGHTING SOURCE

UFL2L SERIES

FIXTURE TYPE:
PROJECT NAME:
LOCATION:
DATE:

LED FLOOD LIGHT WATTAGE SELECTABLE & 3CCT



Yoke Mount



Knuckle Mount

Dimensions

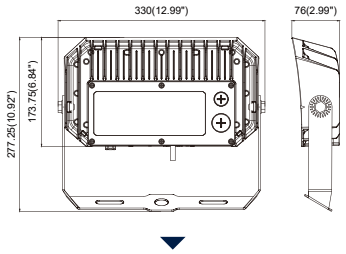

Yoke

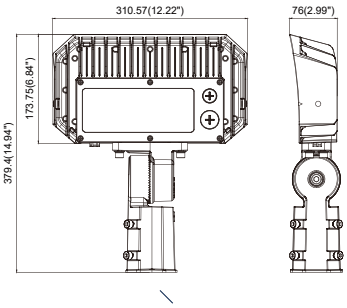

Slip-fitter

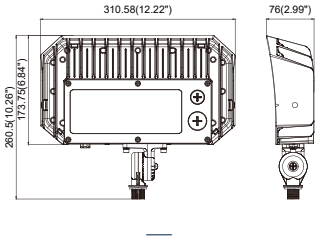

Knuckle

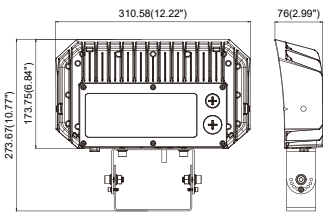

Trunnion

Specification

Material	Seal die casting aluminum housing
Lens	Polycarbonate optical lens
Beam Angle	7H*6V
CCT	3CCT 3000K/4000K/5000K
CRI	80
VOLTAGE	120-277V
MOUNTING	Yoke, slip-fitter, knuckle, trunnion
EFFICACY	Up to 130 lm/W
LIFESPAN	50,000 hrs
DIMMING	0-10V Dimming
LUMEN PACKAGE	7,500 lm to 13,000 lm
AMBIENT TEMP.	-40°C (-40°F) ~ 45°C(113°F)
Warranty	5 Years
Listing	UL Listed,IP 65,DLC PREMIUM

LIRON LIGHTING
YOUR RELIABLE LIGHTING SOURCE

UFL2L SERIES

FIXTURE TYPE:
PROJECT NAME:
LOCATION:
DATE:

LED FLOOD LIGHT WATTAGE SELECTABLE & 3CCT

Features

- Premium durable High-Quality LED Flood Light, engineered to provide unparalleled performance and reliability.
- Built with high-grade aluminum for enhanced durability and protection against external elements.
- Efficient heat dissipation ensures optimal performance and longevity of the LED modules.
- Design to deliver a uniform and wide flood 7H X 6V light distribution.
- Featuring wattage selectable and 3CCT color temperature adjustable,allow you to customize the wattage and CCT on-site to suit your specific lighting needs.
- Versatile mounting options included: Yoke, slip-fitter, knuckle, trunnion
- Premium powder coat dark bronze finish provides resistance to corrosion and weathering.
- Features an integrated photocell for automatic dusk-to-dawn operation, providing enhanced energy efficiency and convenience. Includes a switch that allows you to turn the photocell sensor on or off as needed.
- The light engines and housing are IP65 rated, and sealed against moisture or environmental contaminants.

Ordering Guide Example: UFL2L-UW3CCT-100W-KN

SKU	Wattage	Color Temp	Voltage	Maximum Wattage
UFL2L	UW = Wattage Selectable	3CCT = 3000K/4000/5000K Color Temp. Adjustable	Blank = 120-277V	100W = Maximum Wattage 100 Watt

Mounting Options

Mounting
KN = Knuckle Mount TM = Trunnion Mount SP = Slip-fitter Mount YK = Yoke Mount

Performance Data

	3000K		4000K		5000K	
WATTAGE	LUMEN	EFFICACY	LUMEN	EFFICACY	LUMEN	EFFICACY
60W	7500lm	125 lm/W	7800lm	130 lm/W	7800lm	130 lm/W
80W	10000lm	125 lm/W	10400lm	130 lm/W	10400lm	130 lm/W
100W	12500lm	125 lm/W	13000lm	130 lm/W	13000lm	130 lm/W

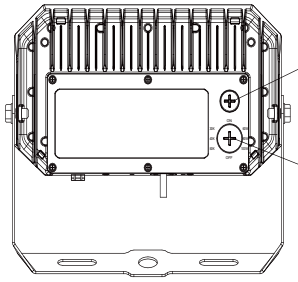

 • 2025 Liron Lighting All Rights Reserved