LIRON LIGHTING
YOUR RELIABLE LIGHTING SOURCE

ALC2 Architectural Linear Series

FIXTURE TYPE:
PROJECT NAME:
LOCATION:
DATE:

2.3” LINEAR
RECESSED MOUNT LINEAR RUN LUMINAIRE

UL | 5 YEAR | Wattage Selectable | CCT Selectable



Specification

Material	Extruded aluminum housing
Lens	Flat/Deep regressed
Beam angle	110 degree
Color Temp	3CCT 3000K/3500K/4000K
CRI	80
Input Voltage	120-277V
Installation	Recessed mount
Life Span	50,000 hrs
Efficacy	105 lm/W
Dimmable	0-10V Dimming
Lumen Package	2,300 lm to 9,200lm
Warranty	5 Years
Ambient Operation Temperature	-20°C(-4°F) to 40°C (104°F)
Listing	UL Listed, Damp Location

Dimensions

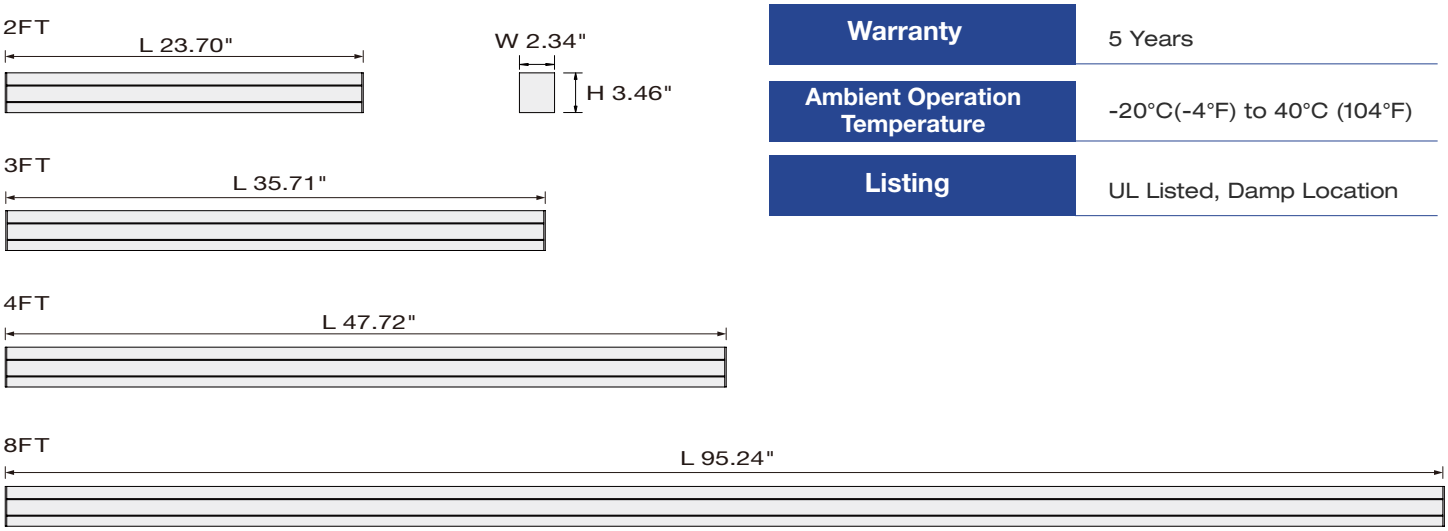

LIRON LIGHTING
YOUR RELIABLE LIGHTING SOURCE

ALC2 Architectural Linear Series

FIXTURE TYPE:
PROJECT NAME:
LOCATION:
DATE:

2.3” LINEAR
RECESSED MOUNT LINEAR RUN LUMINAIRE

Features

- 2.3” wide architectural linear luminaries is available in 2ft,3ft,4ft and 8ft.
- Simply provide wide, powerful lighting to any atmosphere with continuous runs.
- Extruded aluminum housing with premium powder coat white or black finish.
- 100% downlight distribution.
- Architectural recessed lighting solution that compatible with 15/16" and 9/16" t-grid ceiling or dry ceiling.
- Color temperature adjustable 3000K/3500K /4000K.
- Wattage selectable 100%/75%/50%.
- Standard optical flat lens or Deep regressed lens.
- Optional emergency battery backup is available.

Ordering Guide Example: ALC2-D-UW3CCT-WH-4

SKU	Lens	Wattage	CCT	Finish	Linear Feet
ALC2	D = Flat lens(Default) R = Deep Regressed lens	UW = Wattage Selectable	3CCT = 3000K/3500K/4000K	WH = White BK = Black	Nominal linear feet = in increments of 4’ fixture lengths come in 2’/3’/4’/8’

Recessed Mounting Ceiling Type - Dry wall ceiling or Drop ceiling

Dry Wall Recessed Mount

Dry wall Ceiling Recessed Mount with Trim
ALC2-DWRD-TRIM

Dry wall Ceiling Recessed Mount Trimless
ALC2-DWRD-TRIMLESS

Drop Ceiling Recessed Mount

Drop Ceiling Recessed Mount Trim
ALC2-TGRD-TRIM

Drop Ceiling Recessed Mount Trimless
ALC2-TGRD-TRIMLESS

Optional Accessories

Emergency Battery Backup

EM
(SKU: EMBK15WH-A-EXT02) =
15W Emergency battery backup

INEM
= 8W Emergency battery backup internal pre-installed only suitable for 4ft/8ft.

Diffuser Lens Roll

LR42
(SKU:ALC-LR42) =
42’ LENS ROLL

Joiner

ALC2-FC = Line Joiner

(SKU:ALC2-LC-LIT)=

L shape lit joiner

LIRON LIGHTING
YOUR RELIABLE LIGHTING SOURCE

ALC2 Architectural Linear Series

FIXTURE TYPE:
PROJECT NAME:
LOCATION:
DATE:

2.3” LINEAR
RECESSED MOUNT LINEAR RUN LUMINAIRE

Mounting

TRIM (Recessed with brackets)

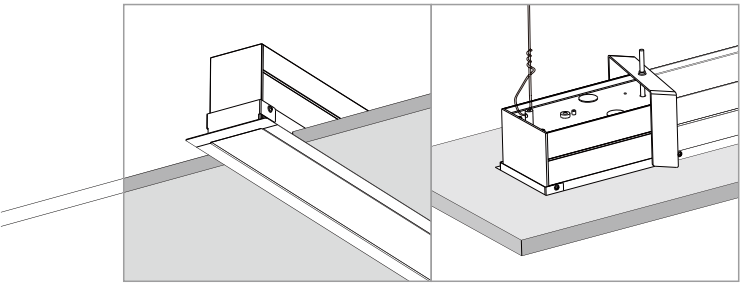

TRIMLESS

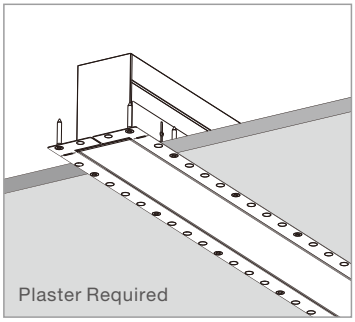

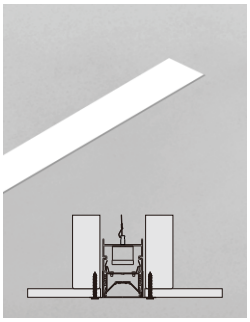

Mounting Kits



Mounting Kits



Recessed In Grid Ceiling

Attention: If you do a seamless, continuous run in the standard or existing T-Grid ceiling, there will be a gap between the End of fixture and the T-Grid, and the gap should be filled with gypsum ceiling board.

T-Grid Trim

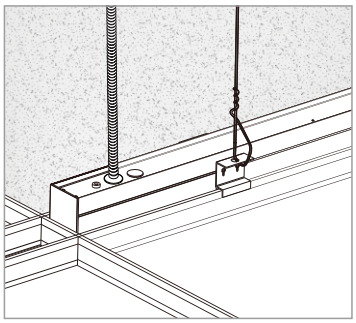



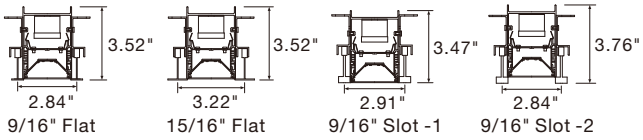

Mounting Kits



T-Grid Trimless

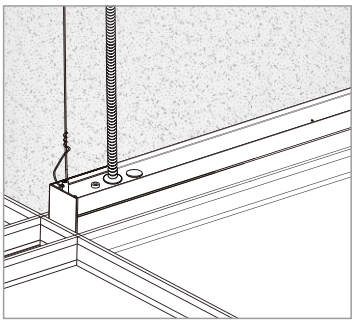



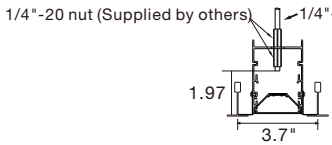

Mounting Kits



LIRON LIGHTING
YOUR RELIABLE LIGHTING SOURCE

ALC2 Architectural Linear Series

FIXTURE TYPE:
PROJECT NAME:
LOCATION:
DATE:

2.3” LINEAR
RECESSED MOUNT LINEAR RUN LUMINAIRE

Performance Data

Lens	Length	Wattage	Lumen Output	Efficacy (4000K)
Diffuser	2′	20W	2,100 lm	105 lm/W, 1,050 lm/ft
		15W	1,575 lm	105 lm/W, 788 lm/ft
		10W	1,050 lm	105 lm/W, 525 lm/ft

Lens	Length	Wattage	Lumen Output	Efficacy (4000K)
Diffuser	3′	30W	3,150 lm	105 lm/W, 1,050 lm/ft
		23W	2,415 lm	105 lm/W, 805 lm/ft
		15W	1,575 lm	105 lm/W, 525 lm/ft

Lens	Length	Wattage	Efficacy	Efficacy
Diffuser	4′	40W	4,200 lm	105 lm/W, 1,050 lm/ft
		30W	3,150 lm	105 lm/W, 788 lm/ft
		20W	2,100 lm	105 lm/W, 525 lm/ft

Lens	Length	Wattage	Efficacy	Efficacy
Diffuser	8′	80W	8,400 lm	105 lm/W, 1,050 lm/ft
		60W	6,300 lm	105 lm/W, 788 lm/ft
		40W	4,200 lm	105 lm/W, 525 lm/ft

LIRON LIGHTING
YOUR RELIABLE LIGHTING SOURCE

ALC2 Architectural Linear Series

FIXTURE TYPE:
PROJECT NAME:
LOCATION:
DATE:

2.3” LINEAR
RECESSED MOUNT LINEAR RUN LUMINAIRE

Mounting Location

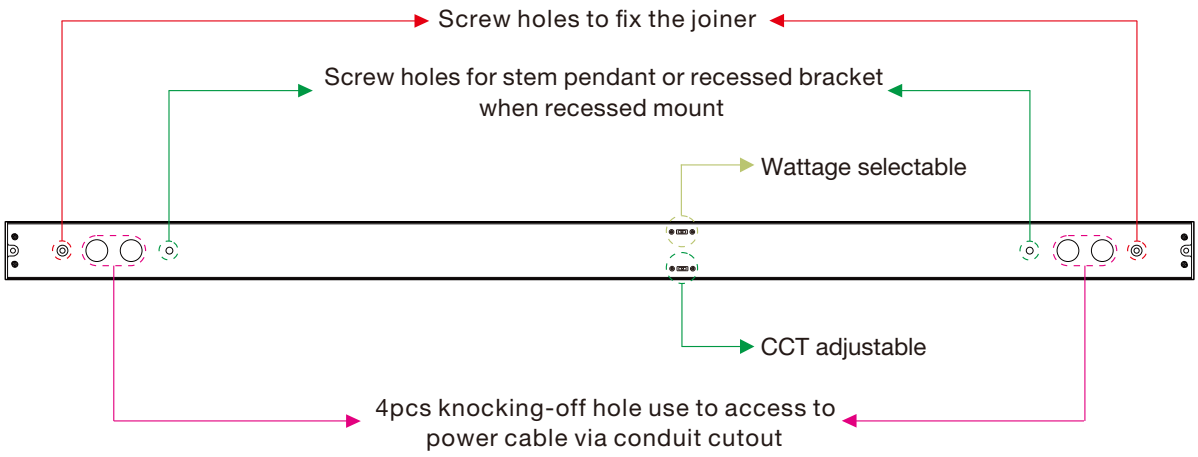

Optional Accessories

Emergency Battery Backup:



Emergency Battery Backup
SKU: EMBK15WH-A-EXT02
- 15W external emergency battery backup require field install.

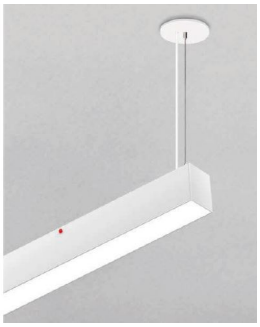

Internal Emergency Battery Backup
-EM

-8W internal emergency battery backup pre-installed.
-Only for 4ft/8ft.