LIRON LIGHTING
YOUR RELIABLE LIGHTING SOURCE

UPK1-400W

FIXTURE TYPE:
PROJECT NAME:
LOCATION:
DATE:

WATTAGE & CCT ADJUSTABLE 400W AREA LIGHT



10 YEAR | UL CERTIFIED | IP65 | Wattage Selectable | CCT Selectable | DLC LISTED PREMIUM | Keilton | SILVAIR

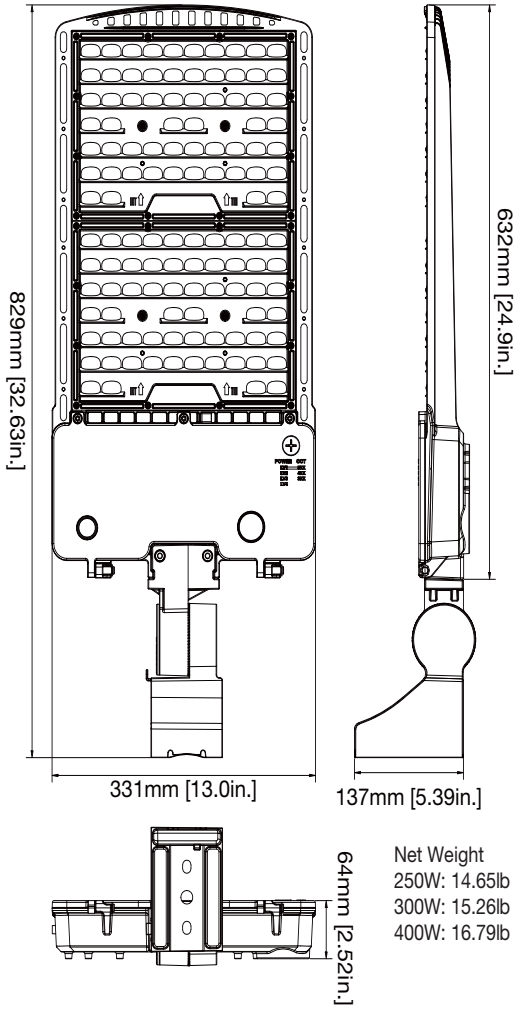

Net Weight
250W: 14.65lb
300W: 15.26lb
400W: 16.79lb

Specification

Housing	Rugged diecast aluminum housing
Lens	Precision acrylic Lens
Distribution Type	Type II/III/IV/V
Color Temp	2CCT 4000K/5000K
CRI	70CRI
Input Voltage	120-277V/277-480V
Installation	Pole mount/wall mount/slipfitter/trunnion/ adjustable pole
Efficacy	Up to 164lm/W
LED Life Span	100,000 hours
Dimmable	0-10V Dimming
Lumen Package	46,000 lm - 60000lm
Warranty	10 Year
Ambient Operation Temperature	-40°C(-40°F) to 45°C (113°F)
Listing	DLC Premium UL LISTED

LIRON LIGHTING
YOUR RELIABLE LIGHTING SOURCE

UPK1-400W

FIXTURE TYPE:
PROJECT NAME:
LOCATION:
DATE:

Ordering Guide

Example: UPK1-UW2CCT-400W-2-BK-AM03

SKU	Voltage	Wattage	CCT	Maxium Wattage	Distribution Type	Finish[1]	Mouting
UPK1	Blank= 120-277v	UW= Wattage Selectable	2CCT= Selectable CCT 4000K/5000K	400W= 400W/360W/320W/300W	2= Type II	Blank= Dark Bronze	AM03= Arm Mount
	HV= 277-480V				3= Type III	BK= Black	SP03= Slipfitter Mount
					4= Type IV	WH= White	WM03= Wall Mount
					5= Type V	RAL#= Custom color available	TM03= Trunnion Mount

Note: 1. Custom color incur additional charge, contact us for more detail.

Accessories options

Glare Shield	Multi direction Adjustable Arm Mount
GLARESHILD-02-L= Half glare shield suitable 400W	UNVUPK= Multi direction adjustable, work with arm mount and wall mount only.
GLARESHILD-02-L-FULL= Full glare shield 400W	

Control and System Opitons

Photocell	Motion Sensor	Bluetooth Sensor
ALPC= 120-277v 3 pin twist lock photocell	PIR01-DB= Plug and play motion sensor Dark bronze finish 40ft mounting height	SILVAIR01= Bluetooth mesh network motion sensor work with SILVAIR APP
ALPC-HV= 277-480V 3 pin twist lock photocell		KEILTON05= Bluetooth mesh network motion sensor work with KEILTON APP

LIRON LIGHTING
YOUR RELIABLE LIGHTING SOURCE

UPK1-400W

FIXTURE TYPE:
PROJECT NAME:
LOCATION:
DATE:

WATTAGE & CCT ADJUSTABLE 400W AREA LIGHT

Product Information

UPK1-400W-TYPE II

		4000K		5000K	
WATTAGE	Dist.Type	LUMEN	EFFICACY	LUMEN	EFFICACY
400W	II	60500lm	151 lm/W	60000lm	150 lm/W
360W	II	56000lm	156 lm/W	55000lm	153 lm/W
320W	II	51000lm	159 lm/W	50000lm	156 lm/W
300W	II	47000lm	162 lm/W	46000lm	159 lm/W

UPK1-400W-TYPE III

		4000K		5000K	
WATTAGE	Dist.Type	LUMEN	EFFICACY	LUMEN	EFFICACY
400W	III	60500lm	151 lm/W	60000lm	150 lm/W
360W	III	56000lm	156 lm/W	55000lm	153 lm/W
320W	III	51000lm	159 lm/W	50000lm	156 lm/W
300W	III	47000lm	162 lm/W	46000lm	159 lm/W

UPK1-400W-TYPE IV

		4000K		5000K	
WATTAGE	Dist.Type	LUMEN	EFFICACY	LUMEN	EFFICACY
400W	IV	60500lm	151 lm/W	60000lm	150 lm/W
360W	IV	56000lm	156 lm/W	55000lm	153 lm/W
320W	IV	51000lm	159 lm/W	50000lm	156 lm/W
300W	IV	47000lm	162 lm/W	46000lm	159 lm/W

UPK1-400W-TYPE V

		4000K		5000K	
WATTAGE	Dist.Type	LUMEN	EFFICACY	LUMEN	EFFICACY
400W	V	61000lm	153 lm/W	60800lm	152 lm/W
360W	V	56500lm	157 lm/W	55500lm	154 lm/W
320W	V	51500lm	161 lm/W	50500lm	159 lm/W
300W	V	47500lm	164 lm/W	46500lm	160 lm/W

 2025 Liron Lighting All Rights Reserved

LIRON LIGHTING
YOUR RELIABLE LIGHTING SOURCE

UPK1-400W

FIXTURE TYPE:
PROJECT NAME:
LOCATION:
DATE:

WATTAGE & CCT ADJUSTABLE 400W AREA LIGHT

EPA OF AREA LIGHT

Item	 1	 2 @90°	 2 @120°	 2 @180°	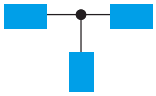 3 @90°	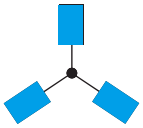 3 @120°	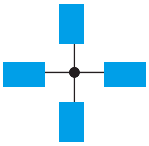 4 @90°
400W	0.4758	0.8091	1.059	0.9516	1.2849	1.3923	1.2849

BUG

WATTAGE	Dist.Type	B	U	G
400W	II	5	0	4

WATTAGE	Dist.Type	B	U	G
400W	III	5	0	4

WATTAGE	Dist.Type	B	U	G
400W	IV	5	0	5

WATTAGE	Dist.Type	B	U	G
400W	V	5	0	4

2025 Liron Lighting All Rights Reserved

LIRO LIGHTING
YOUR RELIABLE LIGHTING SOURCE

UPK1-400W

FIXTURE TYPE:
PROJECT NAME:
LOCATION:
DATE:

WATTAGE &CCT ADJUSTABLE AREA LIGHT

Dimensions

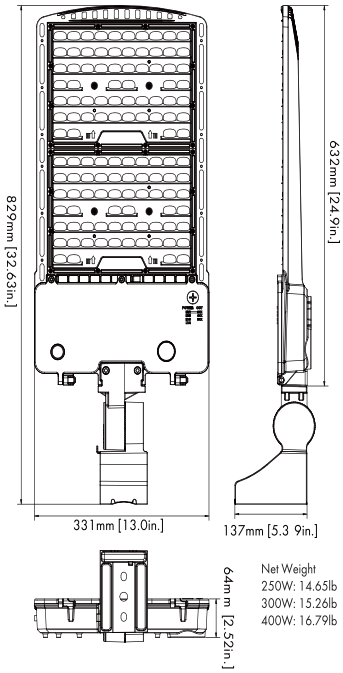

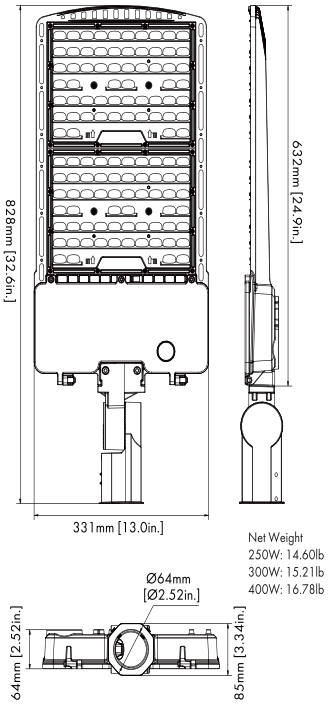

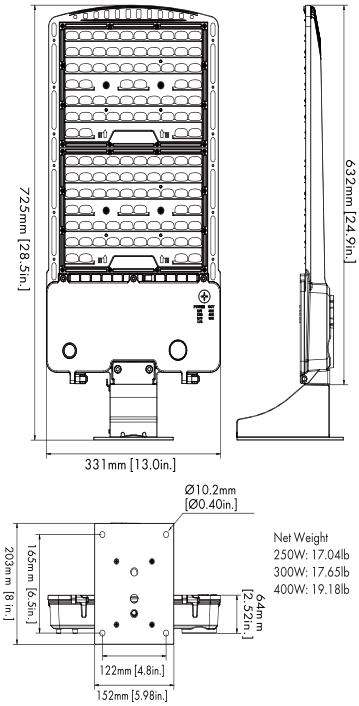

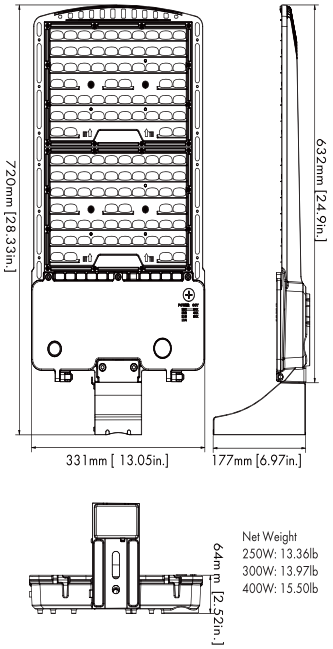

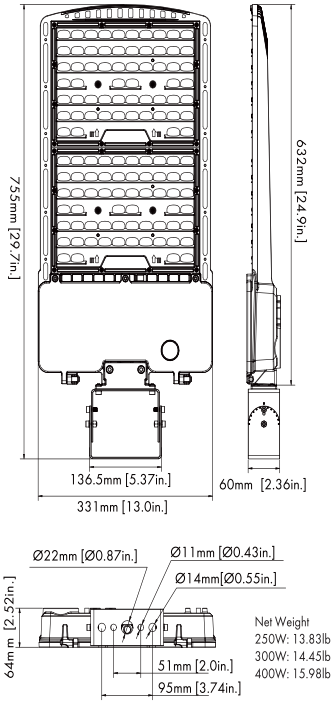

 2025 Liron Lighting All Rights Reserved

LIRON LIGHTING
YOUR RELIABLE LIGHTING SOURCE

UPK1-400W

FIXTURE TYPE:
PROJECT NAME:
LOCATION:
DATE:

WATTAGE & CCT ADJUSTABLE AREA LIGHT

ACCESSORIES



Glare Shield
- SKU:GLARESHIELD-02-L



Full Glare Shield
- SKU: GLARESHIELD-02-L-FULL



Multi Direction Mount (For wall mount & arm mount use only)
- SKU: UNVUPK
- Adjustable universal mount allow custom the beam direction.

2025 Liron Lighting All Rights Reserved

LIRON LIGHTING
YOUR RELIABLE LIGHTING SOURCE

UPK1-400W

FIXTURE TYPE:
PROJECT NAME:
LOCATION:
DATE:

Control Option

Photocell



SKU:ALPC

. 3 PIN twist lock photocell
. 120-277v

SKU:ALPC-HV

. 3 PIN twist lock photocell
. 480V

Standard Motion Sensor





SKU:PIR01-DB

. Dark bronze finish
. 3.5mm audio jack plug and play motion sensor
. 5 Manual switch field selectable without remote control.
-Detection area: 25% / 50% / 75% / 100%
-Hold time: 5s / 1min/ 5min / 10min
-Daylight threshold: 50Lux / 200Lux / 400Lux / Disable
-Standby period: 0s / 10min / 30min / +∞
-Standby dimming: 10% / 20% / 30% / 50%
. Max mounting height 40ft
-Remote control sold separately.

Detection Coverage

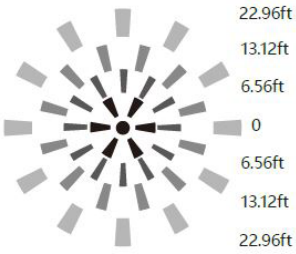

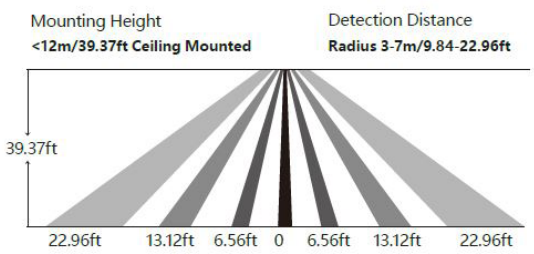

LIRON LIGHTING
YOUR RELIABLE LIGHTING SOURCE

UPK1-400W

FIXTURE TYPE:
PROJECT NAME:
LOCATION:
DATE:

Control Option

Bluetooth Motion Sensor



Keilton

SKU:KEILTON05

. Black finish
. 3.5mm audio jack plug and play for easy integration
. Enhanced long-range antenna, Bluetooth range up to 328ft
. Work with KEILTON app
. Max mounting height 40ft



SILVAIR

SKU:SILVAIR01

. White finish
. 3.5mm audio jack plug and play for easy integration
. Max Bluetooth® range is 200'(60m) line of sight and highly dependent on the integration of fixtures
. Work with SIVAIR app
. Max mounting height 40ft

Synapse Wireless Control



synapse

.Integrated photocell enables dusk-to-dawn operation
.Compatible with ANSI C136.41 7-pin Receptacle
.Self-Healing Mesh Network
.Secure, Over-the-Air Upgrades
.Secure AES128 Encryption
.One Sensor Input
.GPS
.Status LED's are Software-Dimmable
.Power Monitoring
.24VDC Power for Motion Sensors
.Built in surge protection- ANSI C136.2, 6kV
.Power-on dimming test eases installation
.DLC Certification for Indoor and Outdoor
.Dusk to Dawn persistence via photocell and motion sensing .when the Gateway is offline

*Quote by project. Contact us for more information.

LIRON LIGHTING
YOUR RELIABLE LIGHTING SOURCE

FIXTURE TYPE:
PROJECT NAME:
LOCATION:
DATE:

WATTAGE & CCT ADJUSTABLE 400W AREA LIGHT

Distribution Type

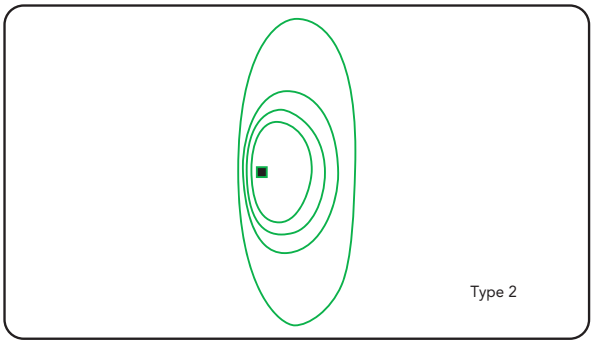

Type2 - Optics is typically used for narrow roadways, and any driving area where a narrow longitudinal throw is required.

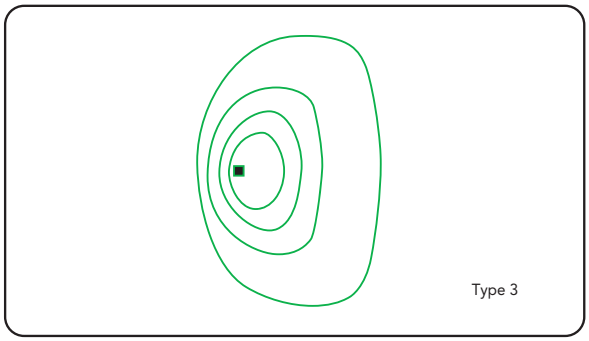

Type3 - Optics produce on asymmetrical pattern that directs the majority of the light forward and equally on both sides of the luminaire. In a back to back configuration, it creates rectangular pattern which can extend pole spacing.

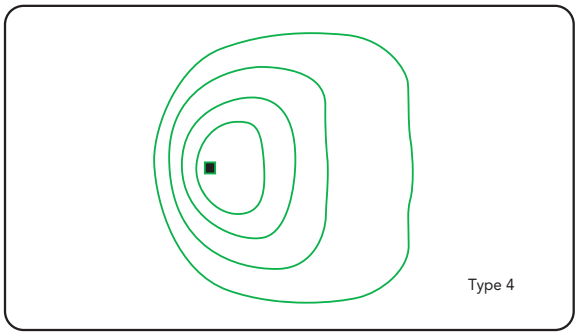

Type4 - Suitable for applications where light is primarily required forward with minimal back light. Typical installations include perimeter poles.

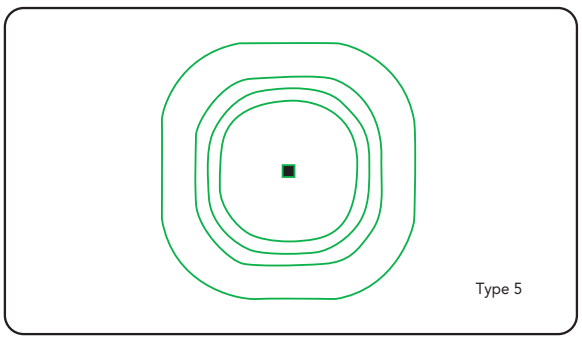

Type5- Optics produce a symmetrical square distribution pattern that distributes light equally on all sides of the luminaire.

 2025 Liron Lighting All Rights Reserved

FIXTURE TYPE:
PROJECT NAME:
LOCATION:
DATE:

WATTAGE & CCT ADJUSTABLE 400W AREA LIGHT

Mounting Options



Arm Mount (AM03)
(4”and 5”Square and Round poles) Standard versatile mounting arm is simple to install and can be used with existing poles for retrofit installations.



Slipfitter Mount (SP03)
An optional cast aluminum mast arm adapter secures fixture head to nominal 2-3/8’’O.D. Horizontal steel tenon arm.



Wall Mount (WM03)
Wall Mount is easy to install for direct wall mounting with 1/2’ conduit wiring or standard J-box mounting



Yoke Mount
Die-cast aluminum trunnion is easily adapted to many surfaces and allows easy fixture aiming angles.



Adjustable Arm Mount [4”and 5”Square and Round poles] (JAM03)
Standard versatile mounting arm is simple to install and can be used with existing poles for retroÿt installations.

2025 Liron Lighting All Rights Reserved