LIRON LIGHTING
YOUR RELIABLE LIGHTING SOURCE

UPK1 Series

FIXTURE TYPE:
PROJECT NAME:
LOCATION:
DATE:

WATTAGE & CCT ADJUSTABLE AREA LIGHT

10 YEAR | 3CCT Selectable | Wattage Selectable | IP65 | CERTIFIED | DLC LISTED PREMIUM | TAA COMPLIANT | Keilton | SILVAIR



140W/180W



300W

Dimensions

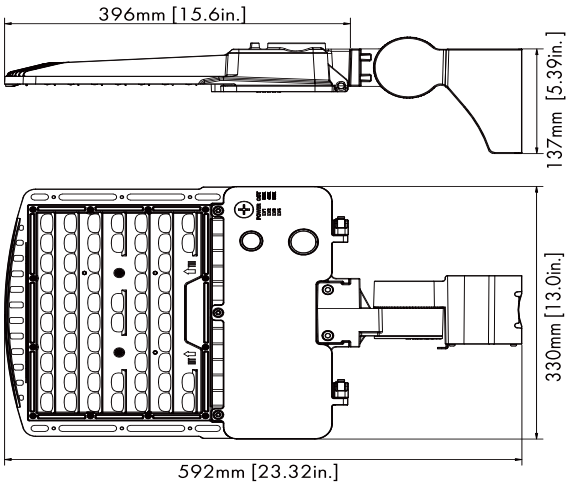

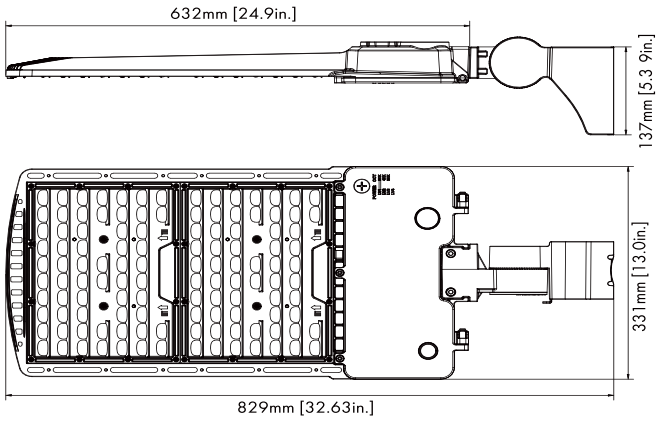

Specification

Housing	Rugged die-cast aluminum housing
Lens	Precision acrylic lens
Distribution Type	Type II/III/IV/V
Color Temp	3CCT 3000K/4000K/5000K
CRI	70
Input Voltage	120-277V or 277-480V
Installation	Pole mount/wall mount,slipfitter mount trunnion mount/adjustable pole mount
Efficacy	Up to 167 lm/W
LED Lifespan	100,000 Hrs
Dimmable	1-10V Dimmable
Lumen Package	9,400 lm to 46,000 lm
Warranty	10 Years
Ambient Operation Temperature	-40°C (-40°F)~45°C (113°F)
Listing	DLC Premium UL Listed/Wet Location

2025 Liron Lighting All Rights Reserved

LIRON LIGHTING
YOUR RELIABLE LIGHTING SOURCE

UPK1 SERIES

FIXTURE TYPE:
PROJECT NAME:
LOCATION:
DATE:

WATTAGE & CCT ADJUSTABLE AREA LIGHT

Ordering Guide

Example: UPK1-UW3CCT-140W-2-BK-AM03

SKU	Voltage	Wattage	CCT	Maxium Wattage	Distribution Type	Finish[1]	Mounting
UPK1	Blank= 120-277v	UW= Wattage Selectable	3CCT= Selectable CCT 3000K/4000K/5000K	140W= 140W/120W/90W/60W	2= Type II	Blank= Dark Bronze	AM03= Arm Mount
	HV= 277-480V			180W= 180W/144W/108W/72W	3= Type III	BK= Black	SP03= Slipfitter Mount
				300W 300W/240W/180W/120W	4= Type IV	WH= White	WM03= Wall Mount
					5= Type V	RAL#= Custom color available	TM03= Trunnion Mount
							JAM03= Adjustable arm mount

Note: 1. Custom colors will incur an additional charge. Please contact us for more details.

Accessories options

Glare Shield	Multi direction Adjustable Arm Mount
GLARESHILD-02-M= Half glare shield suitable 140W/180W	UNVUPK= Multi direction adjustable, work with arm mount and wall mount only.
GLARESHILD-02-L= Half glare shield suitable 300W	
GLARESHILD-02-M-FULL= Full glare shield suitable 140w/180w	
GLARESHILD-02-L-FULL= Full glare shield 300W	

Control and System Opitons

Photocell	Motion Sensor	Bluetooth Sensor
ALPC= 120-277v 3 pin twist photocell	PIR01-DB= Plug and play motion sensor Dark bronze finish 40ft mounting height	SILVAIR01= Bluetooth mesh network motion sensor work with SILVAIR APP
ALPC-HV= 277-480V 3 pin twist photocell		KEILTON05= Bluetooth mesh network motion sensor work with KEILTON APP

LIRON LIGHTING
YOUR RELIABLE LIGHTING SOURCE

UPK1 Series

FIXTURE TYPE:
PROJECT NAME:
LOCATION:
DATE:

WATTAGE & CCT ADJUSTABLE AREA LIGHT

Product Information

UPK1-140W-TYPE II

		3000K		4000K		5000K	
WATTAGE	Dist.Type	LUMEN	EFFICACY	LUMEN	EFFICACY	LUMEN	EFFICACY
140W	II	20000lm	147 lm/W	23000lm	164 lm/W	21000lm	150 lm/W
120W	II	18000lm	150 lm/W	20000lm	167 lm/W	18500lm	154 lm/W
90W	II	13800lm	153 lm/W	15200lm	169 lm/W	14200lm	158 lm/W
60W	II	9400lm	157 lm/W	10300lm	172 lm/W	9700lm	162 lm/W

UPK1-140W-TYPE III

		3000K		4000K		5000K	
WATTAGE	Dist.Type	LUMEN	EFFICACY	LUMEN	EFFICACY	LUMEN	EFFICACY
140W	III	20000lm	147 lm/W	23000lm	164 lm/W	21000lm	150 lm/W
120W	III	18000lm	150 lm/W	20000lm	167 lm/W	18500lm	154 lm/W
90W	III	13800lm	153 lm/W	15200lm	169 lm/W	14200lm	158 lm/W
60W	III	9400lm	157 lm/W	10300lm	172 lm/W	9700lm	162 lm/W

UPK1-140W-TYPE IV

		3000K		4000K		5000K	
WATTAGE	Dist.Type	LUMEN	EFFICACY	LUMEN	EFFICACY	LUMEN	EFFICACY
140W	IV	20000lm	147 lm/W	23000lm	164 lm/W	21000lm	150 lm/W
120W	IV	18000lm	150 lm/W	20000lm	167 lm/W	18500lm	154 lm/W
90W	IV	13800lm	153 lm/W	15200lm	169 lm/W	14200lm	158 lm/W
60W	IV	9400lm	157 lm/W	10300lm	172 lm/W	9700lm	162 lm/W

UPK1-140W-TYPE V

		3000K		4000K		5000K	
WATTAGE	Dist.Type	LUMEN	EFFICACY	LUMEN	EFFICACY	LUMEN	EFFICACY
140W	V	20000lm	150 lm/W	23500lm	168 lm/W	21500lm	150 lm/W
120W	V	18500lm	154 lm/W	20500lm	171 lm/W	19000lm	154 lm/W
90W	V	14000lm	156 lm/W	15600lm	172 lm/W	14500lm	158 lm/W
60W	V	9400lm	160 lm/W	10500lm	175 lm/W	10000lm	162 lm/W

2025 Liron Lighting All Rights Reserved

LIRON LIGHTING
YOUR RELIABLE LIGHTING SOURCE

UPK1 Series

FIXTURE TYPE:
PROJECT NAME:
LOCATION:
DATE:

WATTAGE & CCT ADJUSTABLE AREA LIGHT

Product Information

UPK1-180W-TYPE II

		3000K		4000K		5000K	
WATTAGE	Dist.Type	LUMEN	EFFICACY	LUMEN	EFFICACY	LUMEN	EFFICACY
180W	II	24800lm	138 lm/W	27000lm	150 lm/W	25200lm	140 lm/W
144W	II	20200lm	140 lm/W	22000lm	153 lm/W	20600lm	143 lm/W
108W	II	15300lm	142 lm/W	16800lm	156 lm/W	15700lm	145 lm/W
72W	II	10500lm	146 lm/W	11500lm	160 lm/W	10800lm	150 lm/W

UPK1-180W-TYPE III

		3000K		4000K		5000K	
WATTAGE	Dist.Type	LUMEN	EFFICACY	LUMEN	EFFICACY	LUMEN	EFFICACY
180W	III	24800lm	138 lm/W	27000lm	150 lm/W	25200lm	140 lm/W
144W	III	20200lm	140 lm/W	22000lm	153 lm/W	20600lm	143 lm/W
108W	III	15300lm	142 lm/W	16800lm	156 lm/W	15700lm	145 lm/W
72W	III	10500lm	146 lm/W	11500lm	160 lm/W	10800lm	150 lm/W

UPK1-180W-TYPE IV

		3000K		4000K		5000K	
WATTAGE	Dist.Type	LUMEN	EFFICACY	LUMEN	EFFICACY	LUMEN	EFFICACY
180W	IV	24800lm	138 lm/W	27000lm	150 lm/W	25200lm	140 lm/W
144W	IV	20200lm	140 lm/W	22000lm	153 lm/W	20600lm	143 lm/W
108W	IV	15300lm	142 lm/W	16800lm	156 lm/W	15700lm	145 lm/W
70W	IV	10500lm	146 lm/W	11500lm	160 lm/W	10800lm	150 lm/W

UPK1-180W-TYPE V

		3000K		4000K		5000K	
WATTAGE	Dist.Type	LUMEN	EFFICACY	LUMEN	EFFICACY	LUMEN	EFFICACY
180W	V	25500lm	138 lm/W	28000lm	150 lm/W	26000lm	140 lm/W
144W	V	20800lm	140 lm/W	22800lm	153 lm/W	21000lm	143 lm/W
108W	V	15800lm	146 lm/W	17300lm	160 lm/W	16200lm	150 lm/W
72W	V	10800lm	150 lm/W	11800lm	164 lm/W	11000lm	153 lm/W

2025 Liron Lighting All Rights Reserved

LIRON LIGHTING
YOUR RELIABLE LIGHTING SOURCE

UPK1 Series

FIXTURE TYPE:
PROJECT NAME:
LOCATION:
DATE:

WATTAGE & CCT ADJUSTABLE AREA LIGHT

Performance Data

UPK1-300W-TYPE II

		3000K		4000K		5000K	
WATTAGE	Dist.Type	LUMEN	EFFICACY	LUMEN	EFFICACY	LUMEN	EFFICACY
300W	II	41000lm	137 lm/W	45000lm	150 lm/W	42000lm	140 lm/W
240W	II	33600lm	140 lm/W	37000lm	154 lm/W	34500lm	144 lm/W
180W	II	26000lm	144 lm/W	28600lm	159 lm/W	26600lm	148 lm/W
120W	II	18000lm	150 lm/W	20000lm	167 lm/W	18500lm	154 lm/W

UPK1-300W-TYPE III

		3000K		4000K		5000K	
WATTAGE	Dist.Type	LUMEN	EFFICACY	LUMEN	EFFICACY	LUMEN	EFFICACY
300W	III	41000lm	137 lm/W	45000lm	150 lm/W	42000lm	140 lm/W
240W	III	33600lm	140 lm/W	37000lm	154 lm/W	34500lm	144 lm/W
180W	III	26000lm	144 lm/W	28600lm	159 lm/W	26600lm	148 lm/W
120W	III	18000lm	150 lm/W	20000lm	167 lm/W	18500lm	154 lm/W

UPK1-300W-TYPE IV

		3000K		4000K		5000K	
WATTAGE	Dist.Type	LUMEN	EFFICACY	LUMEN	EFFICACY	LUMEN	EFFICACY
300W	IV	41000lm	137 lm/W	45000lm	150 lm/W	42000lm	140 lm/W
240W	IV	33600lm	140 lm/W	37000lm	154 lm/W	34500lm	144 lm/W
180W	IV	26000lm	144 lm/W	28600lm	159 lm/W	26600lm	148 lm/W
120W	IV	18000lm	150 lm/W	20000lm	167 lm/W	18500lm	154 lm/W

UPK1-300W-TYPE V

		3000K		4000K		5000K	
WATTAGE	Dist.Type	LUMEN	EFFICACY	LUMEN	EFFICACY	LUMEN	EFFICACY
300W	V	42500lm	142 lm/W	46000lm	153 lm/W	42000lm	145 lm/W
240W	V	34500lm	144 lm/W	38000lm	158 lm/W	35500lm	148 lm/W
180W	V	26600lm	148 lm/W	29700lm	165 lm/W	27500lm	153 lm/W
120W	V	18500lm	154 lm/W	20800lm	173 lm/W	19000lm	158 lm/W

2025 Liron Lighting All Rights Reserved

LIRON LIGHTING
YOUR RELIABLE LIGHTING SOURCE

UPK1 Series

FIXTURE TYPE:
PROJECT NAME:
LOCATION:
DATE:

WATTAGE & CCT ADJUSTABLE AREA LIGHT

EPA and BUG DATA

Item	 1	 2 @90°	 2 @120°	 2 @180°	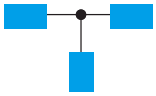 3 @90°	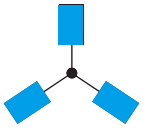 3 @120°	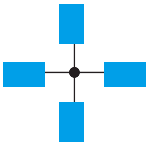 4 @90°
140W/180W	0.3632	0.6849	0.8861	0.7264	1.0481	1.2078	1.0481
300W	0.4758	0.8091	1.059	0.9516	1.2849	1.3923	1.2849

Wattage	Distribution Type	B	U	G
140W	2	3	0	3
	3	3	0	3
	4	3	0	3
	5	4	0	4
120W	2	3	0	3
	3	2	0	2
	4	3	0	3
	5	4	0	4
90W	2	3	0	3
	3	3	0	3
	4	3	0	2
	5	4	0	4
60W	2	3	0	2
	3	3	0	3
	4	2	0	2
	5	3	0	3

Wattage	Distribution Type	B	U	G
180W	2	4	0	3
	3	3	0	3
	4	3	0	3
	5	4	0	2
144W	2	3	0	3
	3	3	0	3
	4	3	0	3
	5	4	0	2
108W	2	3	0	3
	3	3	0	3
	4	3	0	2
	5	4	0	4
72W	2	3	0	2
	3	2	0	2
	4	2	0	2
	5	3	0	3

Wattage	Distribution Type	B	U	G
300W	2	5	0	4
	3	4	0	4
	4	4	0	4
	5	5	0	5
240W	2	4	0	4
	3	4	0	4
	4	4	0	3
	5	5	0	5
180W	2	4	0	3
	3	3	0	3
	4	3	0	3
	5	5	0	5
120W	2	3	0	3
	3	3	0	3
	4	3	0	3
	5	4	0	4

2025 Liron Lighting All Rights Reserved

LIRON LIGHTING
YOUR RELIABLE LIGHTING SOURCE

UPK1 Series

FIXTURE TYPE:
PROJECT NAME:
LOCATION:
DATE:

WATTAGE & CCT ADJUSTABLE AREA LIGHT

ELECTRICAL DATA

Number Of Drivers	Drivers Current (mA)	Nominal Power (W)	INPUT VOLTAGE (V)	CURRENT (Amps)	
1	850	100	120	0.83	
		100	208	0.48	
		100	240	0.42	
		100	277	0.36	
	2520	100	347	0.29	
		100	480	0.21	
1	1200	140	120	1.17	
		140	208	0.67	
		140	240	0.58	
		140	277	0.51	
		140	347	0.40	
		140	480	0.29	
1	960	180	120	1.50	
		180	208	0.87	
		180	240	0.75	
		180	277	0.65	
		180	347	0.52	
		180	480	0.38	
1	1200	250	120	2.08	
		250	208	1.20	
		250	240	1.04	
		250	277	0.90	
		250	347	0.72	
		250	480	0.52	
1	1500	300	120	2.50	
		300	208	1.44	
		300	240	1.25	
		300	277	1.08	
		300	347	0.86	
		300	480	0.63	
1	1460	400	120	3.33	
		400	208	1.92	
		400	240	1.67	
		400	277	1.44	
		400	347	1.15	
		400	480	0.83	

 2025 Liron Lighting All Rights Reserved

LIRON LIGHTING
YOUR RELIABLE LIGHTING SOURCE

UPK1 Series

FIXTURE TYPE:
PROJECT NAME:
LOCATION:
DATE:

WATTAGE & CCT ADJUSTABLE AREA LIGHT

Dimensions

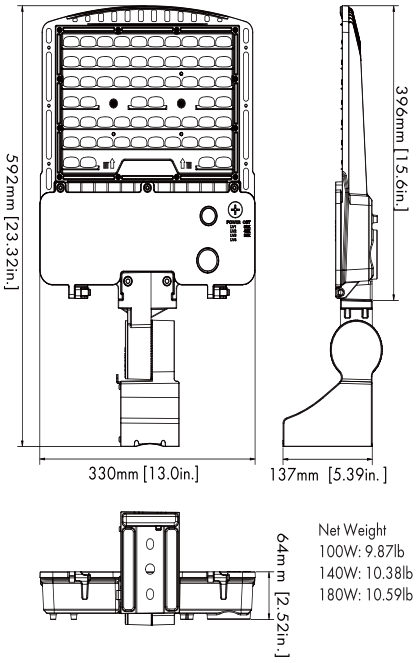

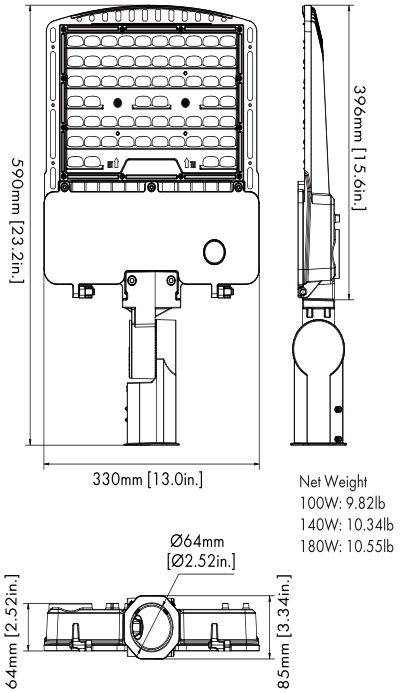

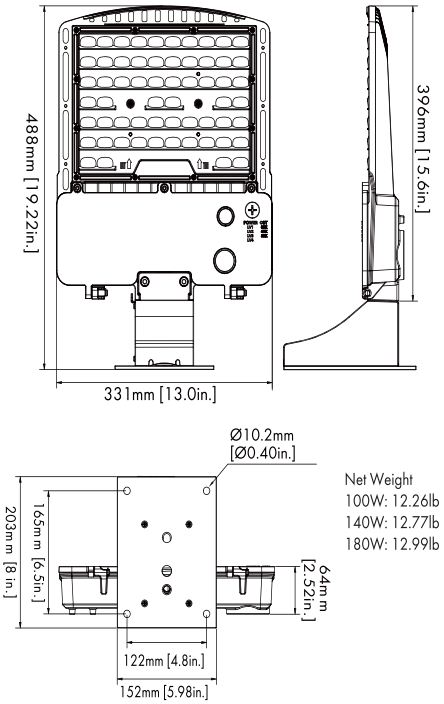

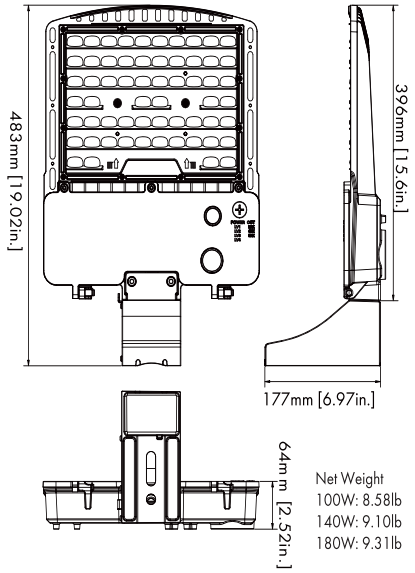

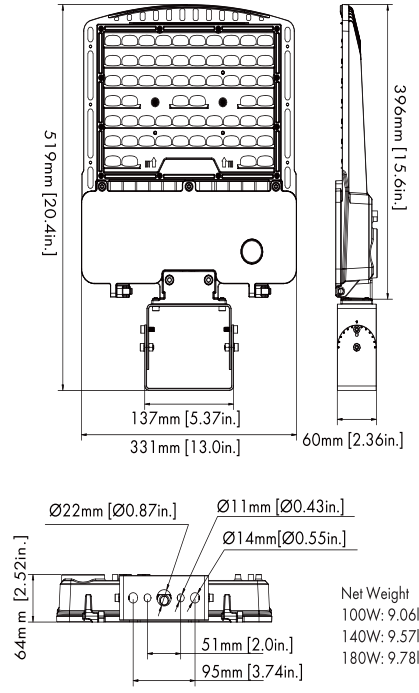

 2025 Liron Lighting All Rights Reserved

LIRON LIGHTING
YOUR RELIABLE LIGHTING SOURCE

UPK1 Series

FIXTURE TYPE:
PROJECT NAME:
LOCATION:
DATE:

WATTAGE & CCT ADJUSTABLE AREA LIGHT

Dimensions

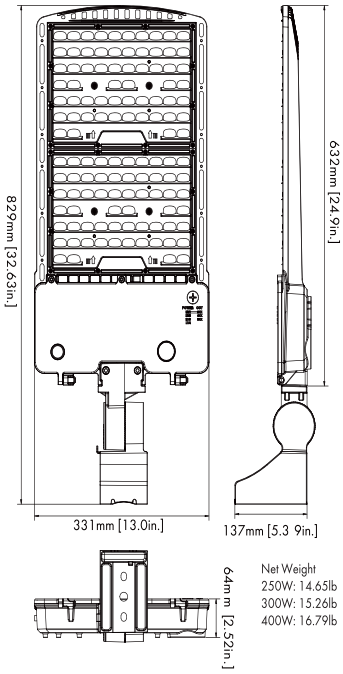

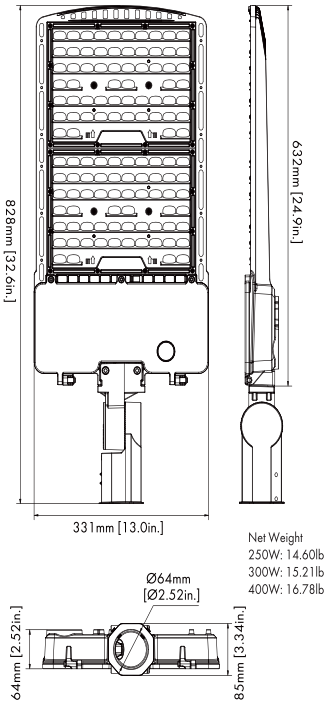

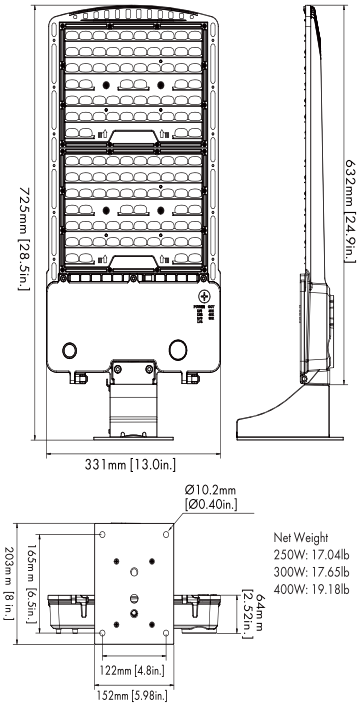

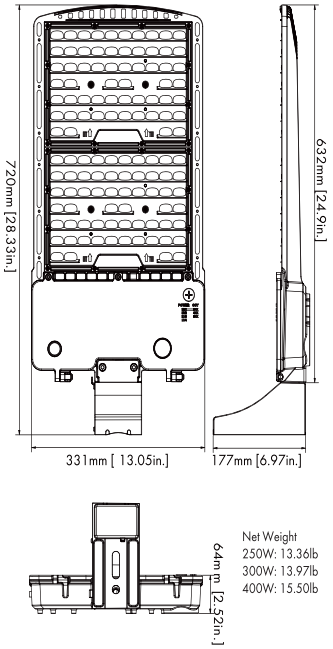

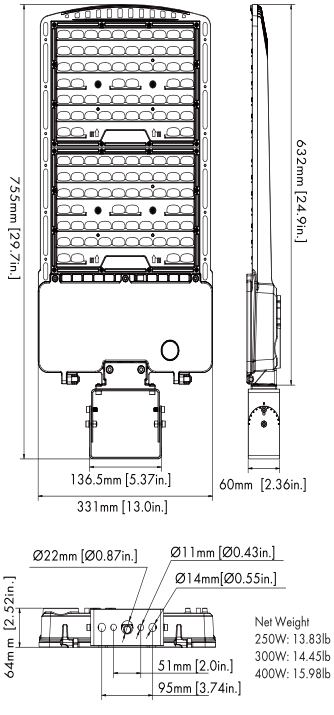

 2025 Liron Lighting All Rights Reserved

LIRON LIGHTING
YOUR RELIABLE LIGHTING SOURCE

UPK1 SERIES

FIXTURE TYPE:
PROJECT NAME:
LOCATION:
DATE:

WATTAGE & CCT ADJUSTABLE AREA LIGHT

ACCESSORIES



Glare Shield
- SKU:GLARESHIELD-02-M/GLARESHIELD-02-L



Full Glare Shield
- SKU: GLARESHIELD-02-M-FULL/GLARESHIELD-02-L-FULL



Multi Direction Mount (For wall mount & arm mount use only)
- SKU: UNVUPK
- Adjustable universal mount allow custom the beam direction.

2025 Liron Lighting All Rights Reserved

LIRON LIGHTING
YOUR RELIABLE LIGHTING SOURCE

UPK1 SERIES

FIXTURE TYPE:
PROJECT NAME:
LOCATION:
DATE:

WATTAGE & CCT ADJUSTABLE AREA LIGHT

Control Option

Photocell



SKU:ALPC

. 3 PIN twist lock photocell
. 120-277v

SKU:ALPC-HV

. 3 PIN twist lock photocell
. 480V

Standard Motion Sensor





SKU:PIR01-DB

. Dark bronze finish
. 3.5mm audio jack plug and play motion sensor
. 5 Manual switch field selectable without remote control.
-Detection area: 25% / 50% / 75% / 100%
-Hold time: 5s / 1min/ 5min / 10min
-Daylight threshold: 50Lux / 200Lux / 400Lux / Disable
-Standby period: 0s / 10min / 30min / +∞
-Standby dimming: 10% / 20% / 30% / 50%
. Max mounting height 40ft
-Remote control sold separately.

Detection Coverage

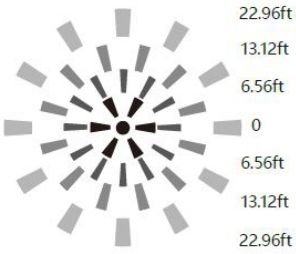

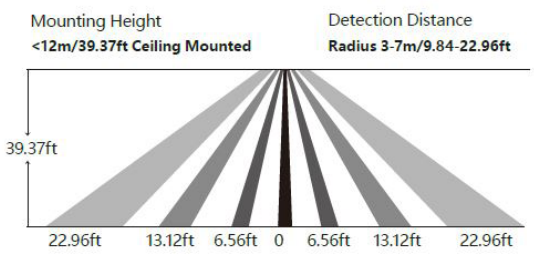

LIRON LIGHTING
YOUR RELIABLE LIGHTING SOURCE

UPK1 SERIES

FIXTURE TYPE:
PROJECT NAME:
LOCATION:
DATE:

WATTAGE & CCT ADJUSTABLE AREA LIGHT

Control Option

Bluetooth Motion Sensor



Keilton

SKU:KEILTON05

. Black finish
. 3.5mm audio jack plug and play for easy integration
. Enhanced long-range antenna, Bluetooth range up to 328ft
. Work with KEILTON app
. Max mounting height 40ft



SILVAIR

SKU:SILVAIR01

. White finish
. 3.5mm audio jack plug and play for easy integration
. Max Bluetooth® range is 200'(60m) line of sight and highly dependent on the integration of fixtures
. Work with SIVAIR app
. Max mounting height 40ft

Synapse Wireless Control



synapse

.Integrated photocell enables dusk-to-dawn operation
.Compatible with ANSI C136.41 7-pin Receptacle
.Self-Healing Mesh Network
.Secure, Over-the-Air Upgrades
.Secure AES128 Encryption
.One Sensor Input
.GPS
.Status LED's are Software-Dimmable
.Power Monitoring
.24VDC Power for Motion Sensors
.Built in surge protection- ANSI C136.2, 6kV
.Power-on dimming test eases installation
.DLC Certification for Indoor and Outdoor
.Dusk to Dawn persistence via photocell and motion sensing .when the Gate-way is offline

*Quote by project. Contact us for more information.

LIRON LIGHTING
YOUR RELIABLE LIGHTING SOURCE

UPK1 Series

FIXTURE TYPE:
PROJECT NAME:
LOCATION:
DATE:

WATTAGE & CCT ADJUSTABLE AREA LIGHT

Distribution Type

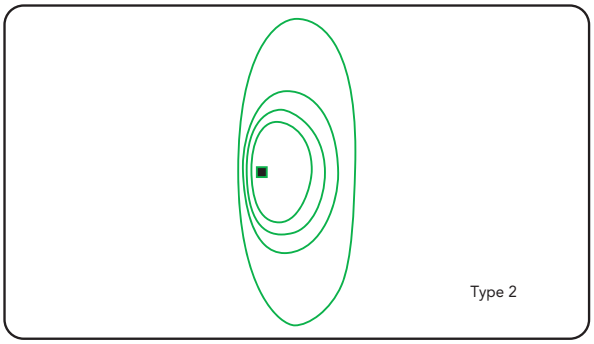

Type2 - Optics is typically used for narrow roadways, and any driving area where a narrow longitudinal throw is required.

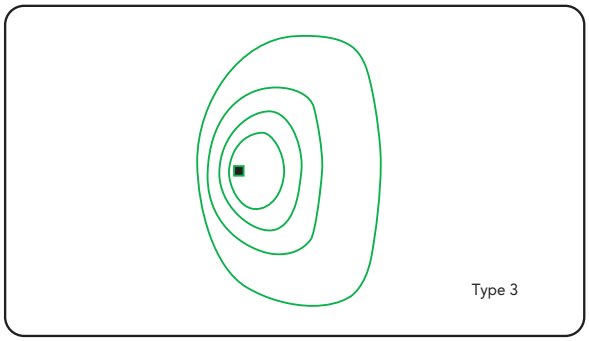

Type3 - Optics produce on asymmetrical pattern that directs the majority of the light forward and equally on both sides of the luminaire. In a back to back, it creates rectangular pattern which can extend pole spacing.

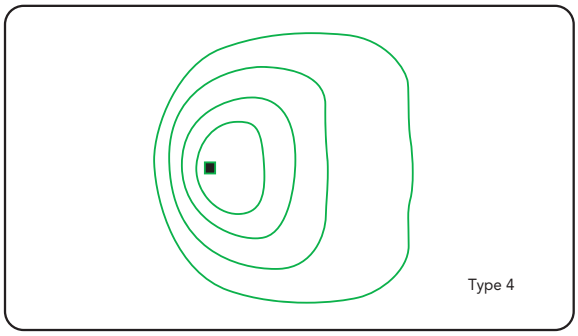

Type4 - Suitable for applications where light is primarily required forward with minimal back light. Typical installations include perimeter poles.

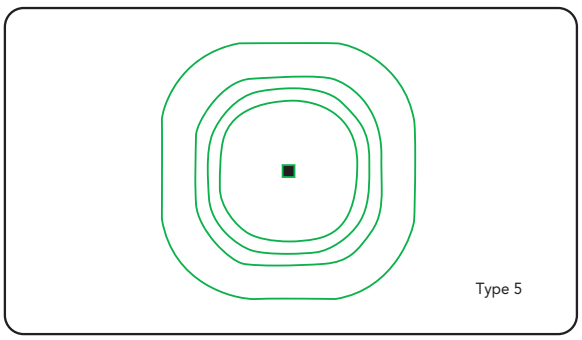

Type5- Optics produce a symmetrical square distribution pattern that distributes light equally on all sides of the luminaire.

 2025 Liron Lighting All Rights Reserved

LIRON LIGHTING
YOUR RELIABLE LIGHTING SOURCE

UPK1 Series

FIXTURE TYPE:
PROJECT NAME:
LOCATION:
DATE:

WATTAGE & CCT ADJUSTABLE AREA LIGHT

Mounting Options



Arm Mount (AM03)
(4”and 5”Square and Round poles)
Standard versatile mounting arm is simple to install and can be used with existing poles for retrofit installations.



Slipfitter Mount (SP03)
An optional cast aluminum mast arm adapter secures fixture head to nominal 2-3/8’’O.D. Horizontal steel tenon arm.



Wall Mount (WM03)
Wall Mount is easy to install for direct wall mounting with 1/2’ conduit wiring or standard J-box mounting



Yoke Mount(TM03)
Die-cast aluminum trunnion is easily adapted to many surfaces and allows easy fixture aiming angles.



Adjustable Arm Mount
[4”and 5”Square and Round poles] (JAM03)
Standard versatile mounting arm is simple to install and can be used with existing poles for retrofit installations.



Multi Direction Mount [For wall mount & arm mount use only] (UNVUPK)
Adjustable universal mount allow custom the beam direction.

2025 Liron Lighting All Rights Reserved