LIRON LIGHTING
YOUR RELIABLE LIGHTING SOURCE

TWP1L Series

FIXTURE TYPE:
PROJECT NAME:
LOCATION:
DATE:

TRADITIONAL WALL PACK

5 YEAR | UL | IP65 | DLC | TAA COMPLIANT

Dimensions

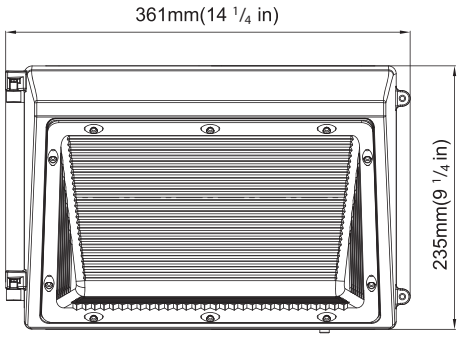

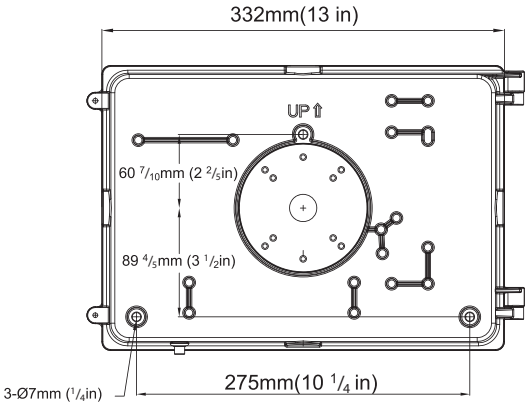

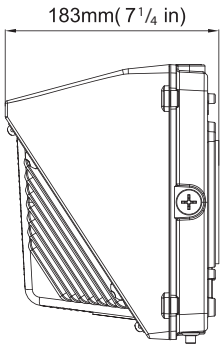



Specification

Size	14¼"L x 7¼"W x 9¼"H
Weight	6 lb
IP Rate	IP65
Color Temp	4000K-5000K
CRI	70
Input Voltage	120-277V / 347- 480V
Power Factor	90%
LED Lifespan	50,000 Hrs
Dimmable	Non Dimmable
Photocell	YES
Efficacy	Up to 120 lm/W
Warranty	5 Years
Ambient Operation Temperature	-40°C (-40°F)~40°C (104°F)

2025 Liron Lighting All Rights Reserved

LIRON LIGHTING
YOUR RELIABLE LIGHTING SOURCE

TWP1L Series

FIXTURE TYPE:
PROJECT NAME:
LOCATION:
DATE:

Features

- Rugged die cast aluminum housing and seals to housing gasket with stainless steel screws
- Dark bronze powder coat finish
- Polycarbonate optical lens with UV stabilizer
- 1/2 inch threaded hole for easier wire connections
- J box or surface mounting
- Compatible with internal photocell
- Standard DLC 5.1 Listed

Ordering Guide Example: TWP1L-90W-50K

SKU	Wattage	Color Temp	Voltage	[1]Finish	[2]Optional Accessories
TWP1L	90W 125W	40K = 4000K 50K = 5000K	Blank = 120-277V HV = 347-480V	Standard finish: Blank = Dark Bronze Premium finish: BK = Black WH = White	Blank = No accessories PC = Photocell (-WPPC)

Note: 1. Premium finish incur on additional cost, contact factory for MOQ and availability.

Product Information

	4000K		5000K	
WATTAGE	LUMEN	EFFICACY	LUMEN	EFFICACY
90W	10000lm	111lm/W	10500lm	117lm/W
125W	14500lm	116lm/W	15000lm	120lm/W

Accessories



Internal Button Photocell

- SKU: WPPC
- Internal button photocell

2025 Liron Lighting All Rights Reserved