LIRON LIGHTING

BLR2 Series

Wattage & 3CCT Selectable Bollard

Fixture Type:

Project Name:

Location:

Date:

Features

- Durable die cast aluminum housing
- Dark bronze polyester powder coat finish
- Annular diffuser provide glow soft light around
- Wattage selectable from 10W to 26W with efficacy of up to 119 lm/W
- 3CCT adjustable 3000K/4000K/5000K
- 360 degrees surround illumination with 80 CRI
- Optional emergency battery available

Switch for wattage & 3CCT selectable

Dimensions

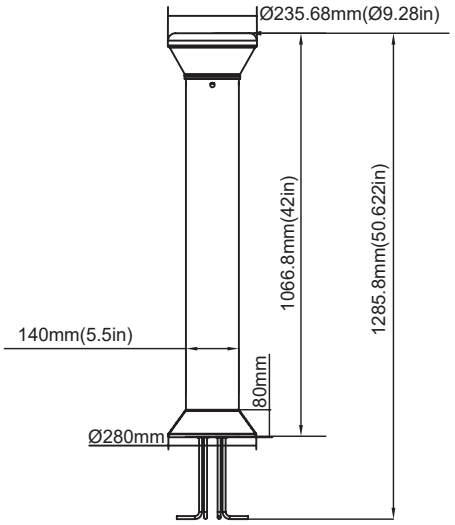

Product Performance Standard

Size	42in x 5.5in	**Power Factor**	90%
Weight	12lb	**Life Span**	50,000 Hrs
IP Rate	IP65	**Dimmable**	1-10V Dimmable
Color Temp	3CCT 30/40/50K	**Efficacy**	Up to 122 lm/W
CRI	80	**Warranty**	5 Years
Input Voltage	120-277V	**Ambient Operation Temperature**	-40C° (-40°F) ~ 40° (113°F)

Ordering Guide

Example: BLR2 UW 3CCT

Fixture Type	Wattage	Color Temp.	Voltage	[1]Finish	Optional Accessories
BLR2	UW (Wattage Switchable 10W/15W/20W/26W)	3CCT = Color Temp. Adjustable (30K/40K/50K)	Blank = 120-277V	Standard Finish Blank = Dark Bronze [1]Premium Finish BK = Black WH = White	Blank = No accessories EM = Emergency battery backup (-S-EMBK8WLV-INT)

Note: 1.Premium finish incur an additional cost. Contact factory for MOQ and availability.

Updated: 7-7-2022

10835 S Wilcrest Dr, Ste C Houston TX 77099 | Customer Service : 833-875-4766 | Email : Sales@lironlighting.com

Due to continuous product improvements, specifications and dimensions are subject to change without notice. Certain options have limited compatibility with some other product selections. Consult www.lironlighting.com for most current technical information.

LiRON LiGHTING

BLR2 Series

Wattage & 3CCT Selectable Bollard

Fixture Type:

Project Name:

Location:

Date:

Product Information

	3000K		4000K		5000K	
WATTAGE	**LUMEN**	**EFFICACY**	**LUMEN**	**EFFICACY**	**LUMEN**	**EFFICACY**
26W	2800lm	110lm/W	3000lm	115lm/W	3100lm	119lm/W

Optional Accessories

Internal Emergency battery backup

- SKU: S-EMBK8WLV-INT
- Internal emergency battery backup is pre-installed by request
- Provide up to 1000 lumen in emergency situations

For the accessories detail, please visit www. lironlighting.com/product_categories/add-on-accessories

Due to continuous product improvements, specifications and dimensions are subject to change without notice. Certain options have limited compatibility with some other product selections. Consult www.lironlighting.com for most current technical information.

LIRON LIGHTING

BLR2 Series

Wattage & 3CCT Selectable Bollard

Fixture Type:

Project Name:

Location:

Date:

Wiring Diagram

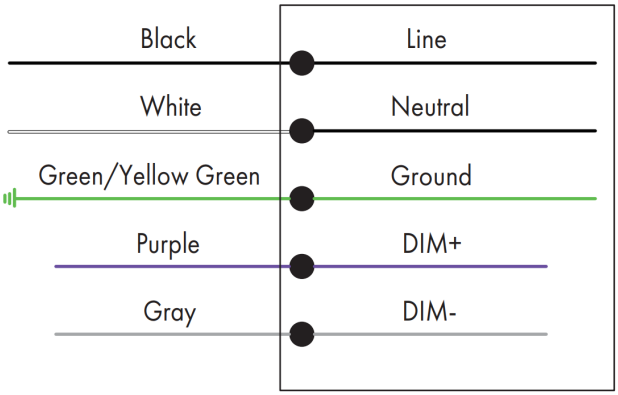

Scan the QR code or visit www.lironlighting.com/product/BLR2 for the complete luminare installation guide.

NOTE:

Due to continuous product improvements, specifications and dimensions are subject to change without notice. Certain options have limited compatibility with some other product selections. Consult www.lironlighting.com for most current technical information.