LIRON LIGHTING
Your Reliable Lighting Source®

R2CNP Series

LED High Bay

Fixture Type:

Project Name

Location:

Date:

Features

- Low profile, rugged die-cast aluminum housing
- White powder coat finish
- UV stabilized polycarbonate optical lens
- 1-10V dimming driver
- Standard surface mount or J box mount
- 3/4" pendant mount available as an option
- Compatible with motion sensor and emergency battery

10 YEAR WARRANTY · IP65 · UL LISTED

Product Performance Standard

Size	12 X 3 inch	**Power Factor**	90%
Weight	6 lb	**Life Span**	50,000 Hrs
IP Rate	IP65	**Dimmable**	1-10V Dimmable
Color Temp	4000K/5000K	**Efficacy**	Up to 129 lm/W
CRI	70	**Warranty**	10 Years
Input Voltage	100-277V/347-480V	**Ambient Operation Temperature**	-40C° (-40°F) ~ 45C° (113°F)

Dimensions

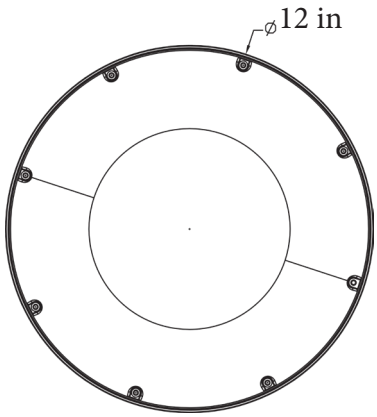

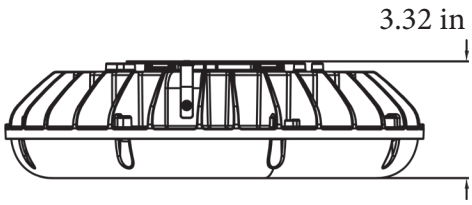

Ordering Guide

Example: LEDR2CNP 45W 50K

Fixture Type	Wattage	Color Temp.	Voltage	Finish	Optional Accessories
LEDR2CNP	30W 45W 60W 90W	40K = 4000K 50K = 5000K	Blank = 100-277V HV = 347-480V	Blank = White	Blank = No accessories MS = Motion Sensor (-BL-PIR-INT) EM = Emergency Battery Backup (-EMBK-CNP-WH)

10835 S Wilcrest Dr, Ste C Houston TX 77099 | Customer Service : 833-875-4766 | Email : Sales@lironlighting.com

Due to continuous product improvements, specifications and dimensions are subject to change without notice. Certain options have limited compatibility with some other product selections. Consult www.lironlighting.com for most current technical information.

R2CNP Series

LED High Bay

Fixture Type:

Project Name

Location:

Date:

Product Information

	4000K		5000K	
WATTAGE	**LUMEN**	**EFFICACY**	**LUMEN**	**EFFICACY**
30W	3500 lm	120 lm/W	3600 lm	127 lm/W
45W	4900 lm	111 lm/W	5000 lm	122 lm/W
60W	7000 lm	118 lm/W	7100 lm	127 lm/W
90W	11400 lm	127 lm/W	11600 lm	129 lm/W

Optional Accessories

Internal Motion Sensor

- SKU: BL-PIR-INT

- Internal motion sensor is field installed or pre-installed by request

External Emergency Battery Backup

- SKU: EMBK-CNP-WH

- External battery backup is field installed or pre-installed by request
- Delivery 900 lumen for 90 minutes emergency operation

For the accessories detail, please visit www. lironlighting.com/product_categories/add-on-accessories

R2CNP Series

LED High Bay

Fixture Type:

Project Name

Location:

Date:

Wiring Diagram

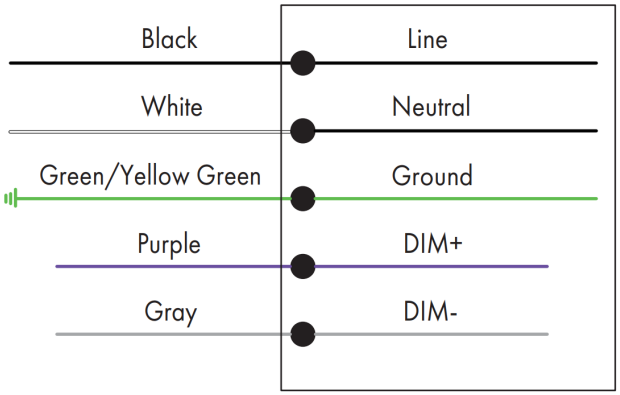

Scan the QR code or visit www.lironlighting.com/product/r2cnp for the complete luminaire installation guide.

NOTE:

Due to continuous product improvements, specifications and dimensions are subject to change without notice. Certain options have limited compatibility with some other product selections. Consult www.lironlighting.com for most current technical information.