LIRON LIGHTING

3MHB Series UFO High Bay

Fixture Type:

Project Name:

Location:

Date:

Features

- Rugged die cast aluminum housing with dark bronze polyester powder coat finish.
- Sealed design with silicone strip for use in wet location.
- Impact resistant polycarbonate lens.
- 1-10V dimming driver.
- 90 or 120 degrees lens for different light range and intensity level.
- 5 ft power cord ,extension power cord available.
- Hook mount/pendant mount with 3/4" conduit size.
- Optional accessories motion sensor and emergency battery backup are available.

5 YEAR WARRANTY | IP65 WATER RESISTANT | FC CE | UL CERTIFIED E489430

Dimension

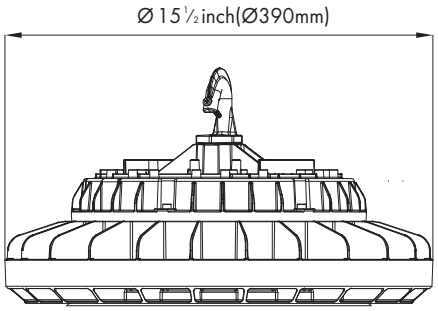

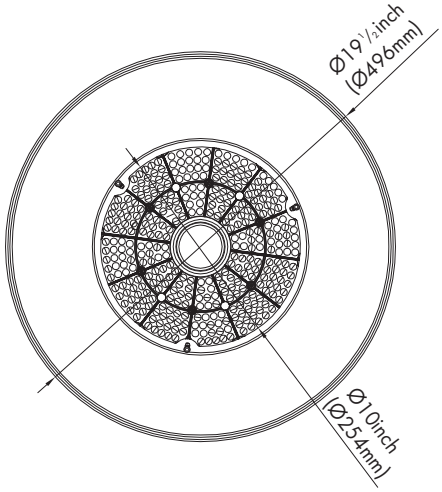

Product Performance Standard

Size	15½"LØ19½"	**Power Factor**	≥90%
Weight	15 lb	**LED lifespan**	50,000 Hrs
Color Temp	4000K - 5000K	**Dimmable**	1-10V Dimming
CRI	80	**Warranty**	5 Years
Input Voltage	120-277V/347-480V	**Ambient Operation Temperature**	-40C° (-40°F) ~55C °(131°F)

Ordering Guide

Example: LED3MHB 135W 50K

Fixture Type	Wattage	Color Temp.	Voltage	Finish	[2]Optional Accessories	Reflector
LED3MHB	100W	40K=4000K	Blank = 120-277V	Blank =Dark Bronze	Blank = No Accessories	Blank = No Reflector
	135W	50K=5000K	[1]HV = 347-480V		MS = Motion Sensor (BL-PIR823-IN)	3MHB-ALU = Aluminum Reflector
	175W				EM = Emergency Battery Backup (EMBK-3MHB)	3MHB-ACRC = Acrylic Reflector
	200W					3MHB-ACRCLENS = Drop Len
						3MHB-ACRCCLAMPER=Clamper

Notes:1. 347-480V is not available for 100W.
2. Motion sensor and emergency battery is not available for 347-480V.

10835 S Wilcrest Dr, Ste C Houston TX 77099 | Customer Service : 833-875-4766 | Email : Sales@lironlighting.com

Due to continuous product improvements, specifications and dimensions are subject to change without notice. Certain options have limited compatibility with some other product selections. Consult www.lironlighting.com for most current technical information.

LiRON LiGHTING

3MHB Series UFO High Bay

Fixture Type:
Project Name:
Location:
Date:

Product Information

	4000K		5000K	
WATTAGE	LUMEN	EFFICACY	LUMEN	EFFICACY
100W	13800lm	138lm/W	14000lm	140lm/W
135W	19170lm	142lm/W	19400lm	144lm/W
175W	25725lm	147lm/W	26075lm	149lm/W
200W	29600lm	148lm/W	29800lm	150lm/W

Optional Accessories

PIR Motion Sensor

-SKU: BL-PIR823-IN
-Internal photocell is field installed or pre-installed by request.

Microwave Motion Sensor

-SKU: BL-810BD-MCW
-Internal photocell is field installed or pre-installed by request.

Emergency Battery Backup

-SKU: EMBK-3MHB
-External 16W battery backup is field installed.
-Delivery up to 2,400 lumen for 90min emergency use

For the accessories detail, please visit www.lironlighting.com/product_categories/add-on-accessories

10835 S Wilcrest Dr, Ste C Houston TX 77099 | Customer Service : 833-875-4766 | Email : Sales@lironlighting.com

Due to continuous product improvements, specifications and dimensions are subject to change without notice. Certain options have limited compatibility with some other product selections. Consult www.lironlighting.com for most current technical information.

LiRON LiGHTING

3MHB Series UFO High Bay

Fixture Type:
Project Name:
Location:
Date:

Optional Reflector

Aluminum Reflector

-SKU: 3MHB-ALU
-Standard 16" diameter lenese, 90 degree beam angle.

Smooth Flat Lens Reflector

-SKU: 3MHB-ACRC
-Standard clear acrylic, high beam angles.

Conical Bottom Drop Lens

-SKU: 3MHB-ACRCLENS
-16" conical drop lens designed to mount directly on acrylic reflector.

Clamper

-SKU: 3MHB-ACRCLAMPER
-Clamper for acrylic lens and drop Lens

10835 S Wilcrest Dr, Ste C Houston TX 77099 | Customer Service : 833-875-4766 | Email : Sales@lironlighting.com

Due to continuous product improvements, specifications and dimensions are subject to change without notice. Certain options have limited compatibility with some other product selections. Consult www.lironlighting.com for most current technical information.

LiRON LiGHTING

3MHB Series UFO High Bay

Fixture Type:
Project Name:
Location:
Date:

Wiring Diagram

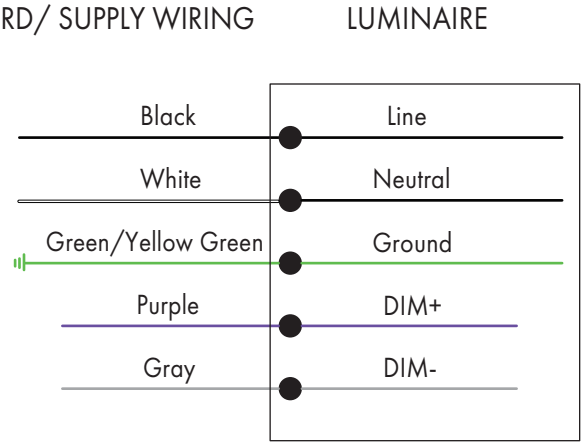

Scan the QR code or visit
www.lironlighting.com/products/led3mhb
for the complete luminaire installation guide.

Note:

10835 S Wilcrest Dr, Ste C Houston TX 77099 | Customer Service : 833-875-4766 | Email : Sales@lironlighting.com

Due to continuous product improvements, specifications and dimensions are subject to change without notice. Certain options have limited compatibility with some other product selections. Consult www.lironlighting.com for most current technical information.