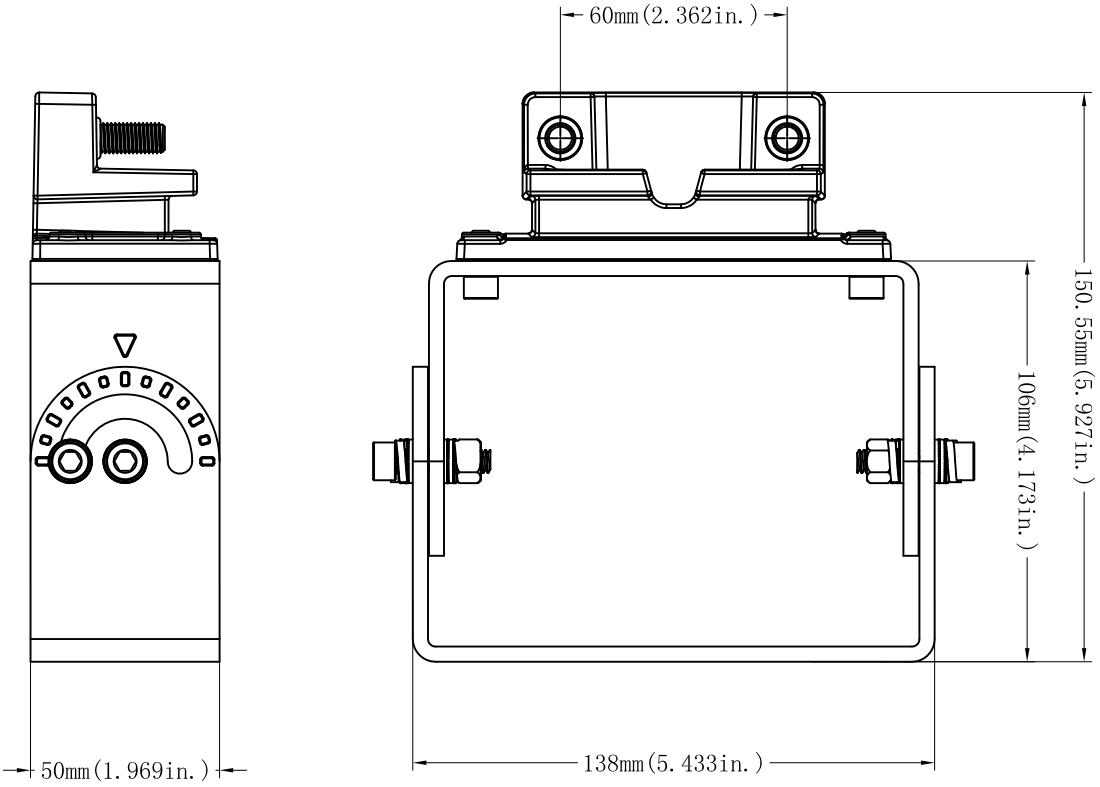
60mm(2.362in.)
150.55mm(5.927in.)
106mm(4.173in.)
50mm(1.969in.)
138mm(5.433in.)

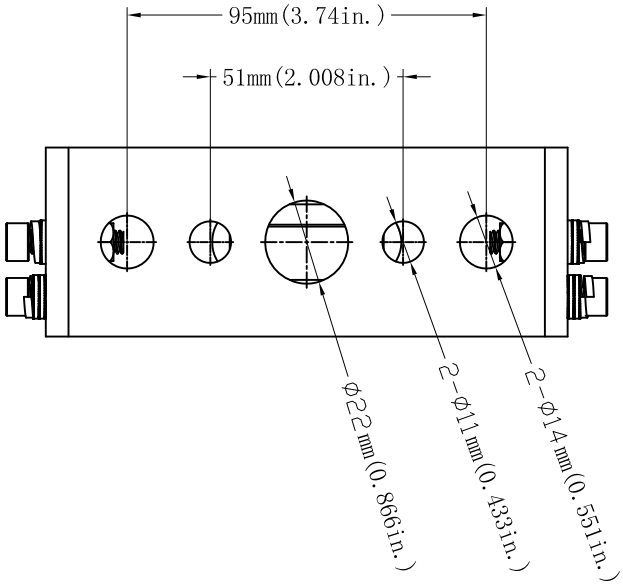
95mm(3.74in.)
51mm(2.008in.)
Φ22mm(0.866in.)
2-Φ11mm(0.433in.)
2-Φ14mm(0.551in.)